N6 Kinnegad to Athlone Dual Carriageway

Advance Archaeological Investigation

Contract 2: Tyrrellspass to Kilbeggan

Stonehousefarm 3

Ministerial Direction A1
Site Identification A1-012
Site Registration E2793

Conor McDermott
David J O'Connor

Final Report

March 2008

Westmeath County Council

Offaly County Council

Meath County Council

NDP NATIONAL DEVELOPMENT PLAN

EUROPEAN UNION STRUCTURAL FUNDS

NRA National Roads Authority An tÚdarás um Bóithre Náisiúnta

Department of Transport An Roinn Iompair

Project Details

Project	Archaeological Excavation
Ministerial Direction	A1
Site Identification	A001-012
Registration No.	E2793
Site Director	Conor McDermott
Senior Archaeologist	David J O'Connor
Consultant	Cultural Resource Development Services (CRDS) Ltd Archaeological and Historical Consultants, Unit 4a, Dundrum Business Park, Dundrum, Dublin 14
Client	Westmeath County Council County Building, Mount Street, Mullingar, County Westmeath
NRA Project Number	A001
Project Engineer	Niall Kennedy - Westmeath County Council
Resident Engineer	Pat Brady – Roughan O'Donovan
Consulting Engineer	Morgan Hart – Roghan O'Donovan
NRA Project Archaeologist	Rónán Swan
Site	Stonehousefarm 3
Townlands	Stonehousefarm
Parish	Kilbeggan
County	Westmeath
Nat. Grid Ref.	233880, 234270
Chainage	29895
OD	72.25m
RMP No.	N/A
Project Duration	18th October 2004 to 21st January 2005
Excavation Start Date	19th November 2004
Excavation Finish Date	25th November 2004
Report Date	Draft: February 2005 Issue: March 2005 Final: March 2008

Table of Contents

List of Appendices ii
List of Figures ii
List of Plates ii
Stonehousefarm 3 Site Team iii
Project Team v

Executive Summary 1

1. Introduction 3
1.1 Excavation Background 3
1.2 The Scope of the Project 3
1.3 Circumstances and Dates of Fieldwork 4

2. Solid Geology and Topography 5
2.1 Solid Geology and Soils 5
2.2 Topography and Landscape 5

3. Archaeological and Historical Background 7
3.1 Baseline Survey 7
3.2 Previous Archaeological Work 7
3.3 Prehistory (*c*. 7000 BC–AD 500) 8
3.4 Early Medieval Period (*c*. AD 500–1170) 10
3.5 Late Medieval Period (*c*. AD 1170–1540) 11
3.6 Post - Medieval Period (*c*. AD 1540–1900) 13
3.7 Recent Landscape History 17

4. Archaeological Excavations 19
4.1 Methodology 19
4.2 Results of Archaeological Excavation 21
4.3 Archaeological Finds 23
4.4 Archaeological Samples 23

5. Conclusions 25

References 31
Appendices 35

List of Appendices

Appendix 1	Recorded Archaeological Sites and Monuments
Appendix 2	Previous Archaeological Investigations from the area
Appendix 3	Recorded Archaeological Finds from the Area
Appendix 4	Feature Register
Appendix 5	Finds Register
Appendix 6	Samples Register
Appendix 7	Excavations of Comparable Sites
Appendix 8	Testing Report extracts for the excavated site

List of Figures

Figure 1	Extract from EIS showing Scheme
Figure 2	Extract from EIS showing Aerial Photograph of Stonehousefarm
Figure 3	Site Location Plan
Figure 4	1st Edition OS RMP Map showing Site Location
Figure 5	Illustration Symbol Key
Figure 6	Pre-excavation plan
Figure 7	Post-excavation plan
Figure 8	Sections
Figure 9	Sections
Figure 10	Site matrix

List of Plates

Plate 1	General progress shot
Plate 2	F600, F602 & F607 pre-excavation
Plate 3	F605 & F606 pre-excavation
Plate 4	F605, F606, F608 & F609 mid-excavation

Stonehousefarm 3 Site Team

Report Compilation:

Senior Archaeologist:	David J O'Connor
Site Director:	Conor McDermott
Supervisors:	Dawn Gooney Muireann Ní Cheallacháin Angelos Parigoris Paul Quinn Denis Shine
Surveyor	Ken Russell

Report signed off by,

EurGeol Dr Stephen Mandal MIAI PGeo

Managing Director, CRDS Ltd

Project Team

Senior Archaeologist	David J O'Connor
Site Director	Conor McDermott
Supervisors	Dawn Gooney Muireann Ní Cheallacháin Angelos Parigoris Paul Quinn Denis Shine
Surveyor	Ken Russell
Site Assistants	Noel Ahern Malachy Byrne Benen Hayden Karen Kane Aude Laffon James Lovely Bérangère Martin Stephanie McCaffrey Aisling Mulcachy Vera Power Diarmuid Walsh Maura Whelen Andy Williams (Health & Safety representative)
Specialist Consultations	Aislinn Collins (Vernacular Architecture) Linda Fibiger (Osteology) Dr Stephen Mandel (Geology) David J. O'Connor (Ceramics) Dr Ingelise Stuijts (Palaeo-environmental) Madeline Murray (Sample processing)

Executive Summary

At the request of Westmeath County Council, CRDS Ltd. have undertaken a programme of archaeological excavations for part of the N6 Kinnegad to Kilbeggan Dual Carriageway. In total 64 archaeological sites were identified during centreline testing as part of the Advance Archaeological Investigation, Contract 2: Tyrrellspass to Kilbeggan (conducted by CRDS Ltd. under licence 04E0579). This report refers to the excavation of Stonehousefarm 3 in the parish of Kilbeggan and barony of Moycashel, Co. Westmeath. Within the road scheme it is located at chainage 29895 on the main N6 centreline. The programme of excavations was undertaken between the 18th October 2004 and 21st January 2005 as part of Ministerial Direction A1 (Site Identification A001-012 - registration E2793). The following report contains the final results of the excavations.

Stonehousefarm 3 consisted of two charcoal production pits and later agricultural activity. These sites are often associated with the smelting and forging of iron and can date to as early as 500 BC to the 17th century AD. Radiocarbon dating of one of the pits (Pit 2) has yielded a date of 939±33BP (1030-1170AD) putting it firmly at the end of the Early Medieval Period. Both Oak and Alder were used seperatly for the production of the charcoal.

The site at Stonehousefarm 3 was archaeologically resolved within the footprint of the proposed road scheme under terms established by the Project Archaeologist, Westmeath County Council.

1. Introduction

1.1 Excavation Background

Stonehouse 3 is one of nine archaeological sites located in the townlands of Demesne or Mearsparkfarm, Kilbeggan South and Stonehousefarm, which are located in Kilbeggan parish in the barony of Moycashel, 1.2–1.5km south and southeast of the village of Kilbeggan, and to the east of the current N52 (Fig. 1).

Number	Site	National Grid	Chainage
A001-010	Stonehousefarm 1	233910, 234065	Local Road
A001-011	Stonehousefarm 2.1 & 2.2	233930, 234340	29925-29975
A001-012	Stonehousefarm 3	233880, 234270	29895
A001-013	Demesne or Mearsparkfarm 2	234270, 234320	30240-3032
A001-054	Kilbeggan South 1.2	233600, 234200	N52
A001-076	Stonehousefarm 4	233800, 234240	29831
A001-077	Stonehousefarm 5.1	234080, 234360	30090
A001-078	Stonehousefarm 6.1	234160, 234340	30165
A001-079	Stonehousefarm 6.2	234160, 234340	30185

1.2 The Scope of the Project

Westmeath County Council is improving the N6 by realigning the existing road between Kinnegad and Kilbeggan, Co. Westmeath. The route extends from the western end of the M4 from Kilcock to Kinnegad and a further portion of the N6 is planned between Kilbeggan and the existing Athlone Relief Road. The entire scheme between Kinnegad and Athlone consists of 57.4km of dual carriageway construction replacing the existing N6.

The location of the route is predominantly to the south of the existing N6 and there will be access to the local road network through the seven grade separated junctions located at Athlone, Farnagh, Moate, Kilbeggan, Tyrrellspass, Rochfortbridge and Kinnegad. The cross–section of the mainline consists of 2m wide verges, 2.5m wide hard shoulders, 7m wide two–lane carriageways and a 3m wide central reserve. This central reserve will accommodate 1m hard strips and a safety barrier. In addition to the mainline dual carriageway there is a further 0.3km of standard dual carriageway to the south of Athlone Interchange to connect to the existing N6 and 1.2km to the south of Kilbeggan Interchange to connect to the existing N52.

Of the 34 existing public roads crossed by the dual carriageway it is proposed to sever two (with pedestrian usage being re-provided for one of these locations), divert three and bridge the remainder, either over or under the new dual carriageway. Incorporated into the scheme are eight underbridges, of which two are accommodation access underpasses and one is for pedestrian use only. There are 32 overbridges, varying in length between 54m and 105m, of which three are accommodation access bridges. Relief from existing traffic severance will occur in the communities of Moate, Kilbeggan, Tyrrellspass, Horseleap, Rochfortbridge and Milltownpass, benefiting residents that currently live there.

Archaeological investigation of the scheme was undertaken in line with an Environmental Impact Statement (Riada Consult, Westmeath County Council 2004), in fulfilment of the requirements of the Roads Act 1993, the Roads (Amendment) Act 1998, the Roads Regulations 1994 and E.C. Directive 85/337/EC 1985.

1.3 Circumstances and Dates of Fieldwork

Topsoil was removed from the area of archaeological interest and a surrounding buffer area by a tracked mechanical digger equipped with a 2m wide toothless ditching bucket. All mechanical excavation of undisturbed ground was conducted under archaeological supervision. The archaeological excavation identified and recorded the full extent of archaeological deposits within the road take. All archaeologically significant features were excavated by open area excavation techniques, which have resulted in the preservation by record of the site. All works were done following consultation with the Project Archaeologist.

Excavation was undertaken between 19th - 25th November 2004. The excavation team consisted of an archaeological director, supervisor and an average of two site assistants supported by the site surveyor.

2. Solid Geology and Topography

2.1 Solid Geology and Soils

The site is located in an area of Carboniferous Age rocks. The bedrock under the site consists of Lower Carboniferous Age Limestone, a fine-grained grey/blue calcareous fossiliferous rock. These rocks, which make up much of the Midlands of Ireland, represent the northward return of the sea at the end of the Devonian, *c.* 360 million years ago, owing to the opening of a new ocean to the south called the Palaeo-Tethys in what is now central Europe.

Inliers (areas of older rocks surrounded by younger rocks) of older (Upper) Carboniferous sandstones and shales and Devonian Old Red Sandstone occur to the west of Kilbeggan, as close as 1km away. The Upper Carboniferous rocks represent periods of shallower and deeper water deposition respectively. The Old Red Sandstone (a coarse to very coarse quartz iron rich sandstone very common in the southwest of Ireland) represents the erosion and (mainly riverine) deposition of the mountains uplifted during the Caledonian Orogeny (see below). To the south in the Slieve Bloom Mountains occur older Silurian Age greywackes and quartzites. Greywacke is a type of sandstone, deposited as a result of tectonic activity of the Caledonian Orogeny, each bed representing a separate earthquake event. In this case these rocks relate to the closure of the Iaepetus Ocean, a major ocean, which at it's widest was probably greater than 3000km across.

Bedrock is not exposed at the site, instead it is covered by boulder clay, which are the result of glacial action during the last glaciation. Eskers - elongated ridges of stratified gravel, probably formed by streams flowing beneath or on a glacier - are common in the area. The soils of the area consist of grey/brown podzols, and are generally very fertile.

2.2 Topography and Landscape

The region south of the existing N6 Kilbeggan in County Westmeath and Tullamore in County Offaly is generally low-lying pastoral plains not exceeding 80m above sea level. It is characterised by undulating hills with intervening basins and valleys. The flatter ground is punctuated by a number of east-west running eskers with a range of smaller subglacial, fluvio-glacial and moronic deposits.

Narrow, tree lined farm tracks and peat boglands also cut across the landscape and arable farming within the area is extremely limited in extent. Particularly low-lying and neglected areas are prone to rushes and drainage ditches are frequently used to alleviate water logging. The route is off-line, largely crossing the low-lying plains south of the existing N6.

The sites are situated on the eastern side of the River Brosna catchment, 10.5km south of Lough Ennell. Lewis noted that Kilbeggan parish "comprises 2975 statute acres … the land is generally of good quality, and the system of agriculture greatly improved; a considerable extent of exhausted bog has been reclaimed, affording excellent pasture, and a small quantity still remains for fuel; there is no waste land" (1837, 51).

In general the topography of the area descends from over 70m OD on the eastern side to 60–70m OD on the western side as it enters the low-lying valley of the River Brosna, south of Kilbeggan. This is an extensive area of alluvial soils, bog and callow land once subject to seasonal flooding. It continues southward and eastward, crossing to the east of the current N52 road on the southern side of Hallsfarm townland. An extensive basin of low-lying peatlands in Kilbeggan South and Skeahanagh townlands extends east-west from the existing N52 to the Kilbeggan branch of the Grand Canal. This is generally located over 500m north of the excavated sites on the route of the proposed road, although it crosses the development to the east of the canal in Skeahanagh townland. Stonehousefarm 3 is located on middle of the north-facing slope of the gravel ridge, in the field to the west of Stonehousefarm 2.

3. Archaeological and Historical Background

3.1 Baseline Survey

As part of the baseline survey for Stonehousefarm 3 the Record of Historic Sites and Monuments (RMP) for Co. Westmeath was consulted for the relevant parts of Co. Westmeath Ordnance Survey 6" Sheet 38. All monuments within a radius of *c.* 3km of the site were identified. The relevant files for these sites, which contain details from aerial photographs, early maps, OS memoirs, Archaeological Survey of Ireland notes and other relevant publications were then studied in the Sites and Monuments Records Office. These monuments are listed in Appendix 1.

The excavations bulletin website (www.excavations.ie) was consulted to identify any previous excavations that may have been carried out in the vicinity of this site. This database contains summary accounts of all the excavations carried out in Ireland from 1985 to 2000. The published editions of Excavations 2001 and 2002 (Bennett 2003; 2004) were also consulted in addition to the centreline testing report for the area (CRDS 2004). Details of these excavations are listed in Appendix 2.

The topographical files in the National Museum of Ireland were consulted to determine if any archaeological artefacts had been recorded from the area. Other published catalogues of prehistoric material were also studied: Raftery (1983 - Iron Age antiquities), Eogan (1965; 1983; 1994 - bronze swords, Bronze Age hoards and goldwork), Harbison (1968; 1969a; 1969b - bronze axes, halberds and daggers) and the Irish Stone Axe Project Database (School of Archaeology, UCD). No artefacts were identified from these sources, however a range of finds were recovered during the centreline testing in the area and these are listed in Appendix 3.

Aerial photographs of the area of the development were examined in the Geological Survey of Ireland in addition to 1st edition Ordnance Survey 6" maps and 1" Geological Survey maps.

3.2 Previous Archaeological Work

The site outlined in this report was discovered following licensed predevelopment archaeological testing. The centreline archaeological testing of the section of the route N6 Kinnegad to Athlone Dual Carriageway, Advance Archaeological Investigations Contract 2: Tyrrellspass to Kilbeggan was carried out by CRDS Ltd under licence 04E0879.

The testing resulted in the identification of 64 previously unidentified archaeological sites (CRDS 2004). There were no previous records of the sites and no surface indications prior to the test excavations.

As part of the final component of Contract 2, CRDS Ltd. were requested to undertake the archaeological resolution of nine of these sites located in Demesne or Mearsparkfarm, Stonehousefarm and Kilbeggan South townlands, south of the village of Kilbeggan, Co. Westmeath. The excavations of these sites were subsequently undertaken by CRDS Ltd. (Licence A001-010, 011, 012, 013, 054, 076, 077, 078 & 079). These excavations revealed a range of site types dating from the prehistoric period to recent centuries and are outlined in other reports.

A number of archaeological studies have been carried out on the proposed route including:

- N6 Athlone – Kinnegad Archaeology & Cultural Heritage, Markus Casey, September 2002
- N6 Kinnegad to Athlone Dual Carriageway Scheme. Draft Archaeological & Historical Background Phase 1, Kinnegad to Kilbeggan, Orlaith Egan, Westmeath County Council
- N6 Kinnegad to Athlone Dual Carriageway Environmental Impact Statement, Riada Consult, Westmeath County Council, 2004
- N6 Kinnegad to Athlone Dual Carriage, Advance Archaeological Investigation, Contract 2: Tyrrellspass to Kilbeggan, CRDS Ltd., October 2004

3.3 Prehistory (*c*. 7000 BC–AD 500)

Prehistory in Ireland equates to all human activity within the country prior to the start of a written record *c*. AD 500. It encompasses four basic discursive divisions of the Mesolithic, Neolithic, Bronze Age and Iron Age. The Mesolithic (or Middle Stone Age) applies broadly to the first settlers in the country in *c.* 7,000-4,500 BC. The period is distinguished by its lithic technology and hunter/fisher-gatherer society. The Neolithic (New Stone Age) and Mesolithic are considered to have considerably overlapped but the Neolithic is generally considered to have started *c.* 4,500 BC and continued to 2,500 BC. The period is classified by the advent of agriculture and changes in artefacts technologies. The start of metallurgy *c.* 2,500 BC signified the start of the Bronze Age which continued to *c*. 500 BC when metallurgic industries evolved to use iron. This period is known as the Iron Age and continued until the Early Medieval period beginning around AD 500.

Little prehistoric evidence is known from the vicinity of the excavations with only a small corpus of prehistoric sites documented from Westmeath as a whole. As yet no inventory has been prepared for the county but, for the purposes of this project, an area around the site approximately 5km north-south by 8km east-west was examined from the SMR records. This revealed only four known prehistoric monuments, namely barrows WM028:087 and WM028:089 (both in Cumminstown), WM028:092 in Garryduff and WM029:07 in Rahugh townlands.

Archaeological finds from the area dating to the prehistoric period are also rare. Two fragments of a bronze horse trapping (NMI 1935:405 and NMI 1935:406) and three axe heads (NMI 1935:406, NMI 1935:407 and NMI 1935:408) are known from the townland of Kilbeggan. These may indicate exploitation of the area around Kilbeggan in the Bronze and Iron Ages respectively. Activity around Kilbeggan in the Iron Age is likely as there is documented settlement and activity in the area through the succeeding Early Medieval period (see below). Two flint fragments were also recovered from Demesne or Mearsparkfarm 2 during archaeological test excavations for the present road scheme. Lithics can belong from Mesolithic to the Bronze Age but in this case are most likely to indicate later Neolithic or Early Bronze Age activity.

As stated, Westmeath does not possess a large corpus of upstanding pre-historic monuments. However, recent infrastructural schemes have identified abundant sub-surface prehistoric remains. Monitoring of excavations involved in sections of the Gas Pipeline to the West in 2002 revealed 31 possible sites in Co. Westmeath (02E0262; Bennett 2002, 499). With the exception of a probable medieval iron working site and a number of isolated pits, when excavated all of these sites proved to be prehistoric in date.

They consisted of eight burnt mounds, six fulachta fiadh, a trough, a Bronze Age round house and a prehistoric round house, (examples of these sites are included in Appendix 7). With the exception of the prehistoric roundhouse (which is likely although not confirmed to be Bronze Age) all the sites were Bronze Age in date. The mounds, fulachta fiadh and trough are features thought to be associated with cooking throughout the Bronze Age. Similarly archaeological testing for the present road scheme revealed a total of 77, sites many of which are likely to be prehistoric in date. Therefore, despite the low number of upstanding prehistoric monuments/remains in Westmeath, the prehistoric landscape is still extensively preserved as sub-surface remains. The corpus of pre-historic sites within the county will expand as infrastructural schemes continue.

3.4 Early Medieval Period (*c*. AD 500–1170)

The Early Medieval period, also known as the Early Christian period, is associated with the advent of Christianity and churches into Ireland as well the beginning of recorded Irish history. The early annals record people, places and events from *c*. AD 500. They record detail from Gaelic life such as the social ranking system and the extent of settlement and land enclosure. They also record the gradual population of the country by churches. The earliest churches were isolated structures, but by the end of the first millennium AD, religious centres become proto-urban centres, with evidence for settlement and industry.

The annals record the foundation of Cill Becain 'Becans Church', by St. Beacan at the end of the 6th or early 7th century AD (Lewis 1837, 51). It is from this foundation that the town and townland of Kilbeggan received its name. Little is recorded of the original monasteries size or holdings but this may be indicated by the low density of ringfort distribution around Kilbeggan.

Settlement during the Early Medieval period (AD 500–1200) was predominantly in ringforts or raths. These are represented in the landscape by circular or sub-circular enclosures and are generally accepted to be the defended homesteads of Early Medieval farmers (Stout 1997, 59). With the exception of SMR site WM038:028 in Stonehousefarm townland (see below) the only other ringfort close to the excavation is WH038:027 in the townland of Skehanagh. It is possible that the Stonehousefarm ringfort was constructed deliberately outside the boundaries of the ecclesiastical land held by the monastery of St Becain, as both were broadly contemporary. The ringfort may therefore indicate the south-eastern extent of the monastery's lands.

The Stonehousefarm ringfort (Appendix 2) is a bivallette enclosure consisting of a low inner bank and slightly higher outer bank separated by a fosse. The fort has a diameter of 20m with a dished interior and a frequently water logged exterior in a field which presently serves as pasture. The monument stands in a prominent position on a slight hill with heavy tree coverage. It represents the only upstanding evidence for the Early Medieval period in the vicinity of the excavations.

Throughout the Early Medieval period the wider political landscape around the study area was controlled by the *Cíneal Fhiachach* or Kinelagh (race of fiacha). This family traced their lineage back to Fiacha, son of Niall of the Nine Hostages, and brother of Laoighre who met St Patrick at Tara. In 507 the annals record a victory by Fiacha over Foilghe Berraidhe at the battle of Druim Deargaighe,

securing lands from Cluain in Dibhair to Uisneach. Fiacha is recorded as dying at Carne Fiagha early in the 6th century giving rise to the family name Carne Fiagha, later Kinaliagh.

Little mention is made again of the Kinelagh until the 12th century when the family had split into three septs. The largest branch was the McEoghagans or Mageogehgans, with two rival families the Ua Braonain (O Brennan) and the Ua Maoil Mhuaidh (Molloy). The Ua Braonain were the chief family of Cenel Enna/ Kinel Enda (Walsh 1985, 26). The Ua Maoil Mhuaidh and the Ua Braonain came to consolidate holdings from Durrow to Birr, which later became the baronies of Ballyboy and Ballygowan in Co. Offaly. The McEoghagans continued to hold lands across the modern counties of Offaly and Westmeath up to Athlone with the lands still bearing the original family name of Kenaliaghe.

Historically little else is referenced on Kilbeggan or the surrounding townland. Lewis (1837, 51) citing the annals refers to a sanguinary battle between the Irish and the Danes in 972 at a ford presumably on the river Brosna. The location of this ford is not clear although it is said to be close to the present bridge which was constructed in the 19th century. The site of the battle was renamed 'Aghnaccan' or 'Ford of Heads', after the battles slain. The reference implies a possible Viking presence around Kilbeggan in the Early Medieval period, however this is not borne out in the archaeological record.

3.5 Late Medieval Period (*c*. AD 1170–1540)

The arrival of the Anglo-Normans in Ireland in c. 1170 substantially changed the social and political structures of the country. The most obvious aspect of the Norman invasion was the redistribution, division and reconstruction of Irish landholding and field systems. This was most pronounced in Leinster with the imposition of an arable field system on what had been a principally pastoral society. The changes in the landscape were reflected in new monument types, the most common of which were the Motte and Bailey. These consisted of an artificially constructed mound of earth usually with a wooden tower on top. The monument is typical of the later 12th century and was considered an aggressive castle being cheap and quick to construct and used to consolidate new holdings. The Bailey was an enclosed settlement around the base of the mound but is not a feature on most mottes.

The Normans enjoyed initial success across Leinster in the late 12th century. Norman power reached a hiatus in the mid 13th century when most of Leinster (with the exception of isolated regions such as the Wicklow mountains or large areas of bog), large tracts of Munster and Ulster and even portions of Connacht were under Norman control. From the mid 13th century, and especially in the 14th century, the

colony went into decline. This is partially attributed to lack of interest and support by the English crown in the colony and the Gaelicisation of the original colonists. However a series of historical events such as the Bruce invasion in 1317 confounded the problems of the Anglo-Norman society.

A similar pattern is evident in Westmeath where the Normans were unable to exert control over the whole county which then occupied part of the 'Kingdom' of Breifne, (Westmeath was not created until a 1542 Act of Parliament). Norman presence is attested to in the remains of monuments over the landscape where large families such as the Nugents, Tyrells, Petits, Tuites, Delamars and Daltons constructed mottes in locations such as Mullingar, Rathwire, Rathconrath and Castletown (Walsh 1985, 10). However, a strong and independent Gaelic presence was centred and maintained by the Mageoghegan lordship based around the barony of Moycashel, created in 1573 (ibid. 7). The Mageoghegan lordship did not submit until well into the Elizabethan era (late 16th century), when chieftain Conly's territory became the barony of Moycashel on condition that his son be appointed as sheriff and the securing of 'the extensive lands of the monastery of Kilbeggan' as a bribe (ibid.). This area would certainly have been open to Norman influence especially in the later 12th and early 13th centuries but probably remained Gaelic in custom and outlook under the leadership of the Mageoghegan family.

The Normans were also largely responsible for the foundation and sponsorship of a series of new religious houses. This was already common in Gaelic society but the opening of Ireland to the Norman influence lead to an influx of new European traditions and religious houses. One such order was the Cistercians who were founded in 1098 in Burgundy, France (de Paor 1969, 112). The first Cistercian house in Ireland was Mellifont, founded in 1142 just prior to the Norman invasion (Gwynn and Hadcock 1970, 139). Prince John confirmed the grant of lands to the abbot and convent in the later 12th century (Conway 1953, 39). Following Mellifont the order flourished with foundations in Bective, Co. Meath, Baltinglass, Co. Wicklow, Boyle, Co. Roscommon, Monasteranenagh, Co. Limerick, Inishlounaght, Co. Tipperary and Odourne, Co. Kerry (de Paor 1969, 115).

In 1150, also shortly prior to the coming of the Normans, Kilbeggan's Cistercian house was founded as a daughter house to Mellifont (Gwynn and Hadcock 1970, 137). The sponsors of the monastery are contested but the McGloghlan family most likely founded it (ibid.). Woods and Walsh (1907; 1957) citing the Annals of the Four Masters refer to the monastery as 'The River of God' founded by an Anglo-Norman family called the Daltons under the patronage of the Blessed Virgin. Lewis (1837, 51) however states that the monastery had simply fallen into decay at this stage and was rebuilt by the

Dalton family. Kilbeggan's links with Mellifont are reasserted at this time as a company of monks was sent from Mellifont to 'refound' Kilbeggan (ibid.).

The confusion over the original sponsors seems to stem from a regrant by the Daltons in the late 12th century. The Daltons are known to have been a prominent Norman family in Westmeath at this time and their presence does indicate that it was to some degree a contested landscape. In the early 13th century the abbey was again linked with prominent Gaelic families with Melaghlin McGloughlan recorded as dying on pilgrimage there in 1213. The deaths of his sons Roderick and Maelsechlainn at the abbey are also recorded in monastery records in 1218, confirming the abbeys links with the Gaelic dynasty. These are two of a series of references in Annals of Loch Cé and the Annals of the Four Masters from 1196-1401, recording abbots and prominent pilgrims to the site.

3.6 Post - Medieval Period (*c*. AD 1540–1900)

There is no definitive date for the conclusion of the Medieval period in Ireland; for the purpose of this report it is taken as 1540, the year the monasteries of Ireland were suppressed (White 1943). This is a convenient date for illustrating the increasing influences the centralised state, in this case the Tudor administration of King Henry VIII, was playing in Irish affairs. This process came to a head by the middle of the 17th century with rebellion, the Confederacy and the arrival of Cromwell, between 1641 and 1652. Following the final victory of Cromwell's New Model Army in 1652 a number of surveys were undertaken for the purposes of redistributing land. Inadvertently these surveys also recorded much of the patterns of society and settlement, which had survived from the Medieval period. These include the Civil Survey (Simington 1940), the cartographic Down Survey of 1656 and the Census of 1659 (Pender 1939).

The Down Survey of 1655-1662 shows the cartographic results of the Civil Survey, a major land survey which was the precursor to the land satisfactions made in the Acts of Settlement and Explanation of 1662 and 1665. At this time a large area east of the Brosna around Kilbeggan was known as 'English Land'. It is possible that a large portion of these lands were created from the former holdings associated with Kilbeggan Abbey. This was just one of the wholesale land redistributions that occurred in Westmeath during this period.

Lewis (1837, 51) recorded the abbey, previously a focal point for Kilbeggans development, as 'inconsiderable remains'. The Abbey had slowly diminished following dissolution. Reference is made on

30th November 1539 that Abbot Maurice O'Shanahan was seized of his house, c. 820 acres, several granges, messuages and cottages, val. £13 19s. 4d (Gwynn and Hadcock 1988, 137). In 1570 (post dissolution) the remains of the abbey contained a church and the usual cloistral buildings, not valued, while the gardens, mill, two eel-weirs, several messuages and cottages, two granges, 63 acres and the rectory of Kilbeggan were valued at over £6 (ibid.). The house (previously the abbey) was granted to the Lambart family in the 17th century (see above).

Geophysics was conducted on the site of the abbey in 2003, revealing extensive sub-surface remains and associated field boundaries and access routes. With the exception of the survey, only three archaeological assessments have been made within the town. These relate to monitoring and test-excavation carried out under archaeological licence (99E0062 & 01E0787), which revealed no archaeological remains.

In 1542 the county of Westmeath was created out of a portion of Meath, effectively splitting the medieval kingdom of Breifne. It was intended to incorporate into the county new administrative units to facilitate a systematic re-plantation of 'crown lands' with loyal subjects. Despite the initial land revisions, the McEoghagan dynasty (previously the 'race of fiacha') still held extensive lands in Westmeath in the mid 16th century. An account of their territory in 1567 stated:

McEoghagan country called Kenaliaghte containeth in length XII (12) miles, and in breadth 7 miles. It lyeth midway between the fort of Faly (Philipstown) and Athlone, five mile distant from either of them and five mile distant from Mollingare, which lyeth northward of it. (Irish Archaeological Miscellany, 183).

In 1573, however, the barony of Moycashel was created principally out of what had been Kenaliaghte and was incorporated into the county of Westmeath. The barony was granted to Wm. Browne in 1595 (Gwynn and Hadcock 1988, 137).

Two different accounts are given of the submission of the Mageoghegan dynasty. Walsh implies Conley, chief of the Mageoghegan family, accepted submission (1985, 7). This was in return for a bribe of lands around the dissolved monastery of Kilbeggan and to secure his eldest son Ross a position as sheriff of the newly created barony. The Calendar of State Papers (495) state Ross was appointed seneschal and sheriff of Westmeath in 1571. In an ambitious attempt to usurp his father he entered into an alliance with the crown forcing his father Conley to surrender to the English in 1574. In return

Conley received the position of Seneschal of Kinaleagh in 1574, which he hoped to use to overthrow his son, who was subsequently murdered in 1580.

The Magheoghegan submission removed the last vestiges of Gaelic free holding in the county. However, the family still held extensive lands into the 17th century. At this time the holdings are estimated at 15,530 acres but following the plantations this had decreased to 3,838. In total 29,580 acres were seized and replanted during the plantations in the Barony of Moycashel alone, most coming from the Magheoghegan dynasty or similar Gaelic families (Sheehan 1978).

The treatment of the Mageoghegans was typical of the trend nationally. From 1534–1609 the English government attempted to regain control in the colony through a military based administration in Dublin Castle. Following a failed rebellion in Munster against the English administration, the Earl of Desmond and his followers were seized of 230,000 hectares. This area was to be resettled by loyal Scotish and English settlers in a series of large landlord based estates. The Ulster conquest followed at the end of the 16th century where the emphasis was placed on the re-division of land and forest clearance. Extensive land confiscations followed in the 17th century and were mapped by projects such as the Down Survey. A definitive defeat of Catholic forces in the Williamite Wars (1689–91) ensured a prolonged period of relative stability both socially and economically, after a century of unrest. New ideas concerning rationalised field systems, land improvements, enclosed fields, demesne landscapes and small rural towns were initiated from this period (Stout and Stout 1997).

Around Kilbeggan it is likely that the area called ‘English Land’ in the Down Survey formed part of the Mageoghegan lands seized in plantations. These may have been the lands granted to the family from Kilbeggan Abbey during the submission of Conley. Kilbeggan was contained within the Mageoghegan family’s mainstay and their holdings formed over 39% of all lands seized in Westmeath during the plantations.

It is probably in the mid-late 17th century that the landscape around Kilbeggan started to resemble that which is evident today. Following the plantations large estates would have been created and these are still indicated in the townland names. Demesne or Mearsparkfarm and Stonehousefarm are two obvious examples directly relevant to the excavation. Large houses such as Bellmount also have their origins in the 17th/18th century. The estates generated new middle and upper classes that in turn invested in the agricultural development of the lands they held. Obvious examples from the area around Demesne or Mearsparkfarm and Stonehousefarm consist of the digging of large

drainage/boundary ditches, the amalgamation of field systems, and the clearance of forestry. All of these changes in land-holding and farm practices were intricately linked with the development of Kilbeggan town as a rural centre in the 17th and 18th centuries. Kilbeggan was founded in the 17th century as a market town and parish following the successful application for a weekly market and annual fair by Sir Oliver Lambert. In 1612 the town received a charter and in 1620 Charles, son of Oliver Lambert, procured a grant of two additional fairs (Lewis 1837, 51). These formed the basis of a flourishing economy up to the last quarter of the 18th century.

Sir Henry Piers in 1682, while visiting Kilbeggan during a tour of Westmeath, described the county as 'rude and barbarous' referring principally to the lack of urbanisation. He described the principle commodities as corn, hides, tallows, flax, hemp, cheese, butter and wool. It was on the basis of these that Kilbeggan town grew as a trading post. During the first three-quarters of the 18th century agriculture and trade continued to flourish despite Acts of Parliament protecting English markets from Irish producers.

Land usage surrounding the town started to diversify with a large amount of land devoted to flax and grain. In the early 19th century a figure of 1809 acres in Westmeath was under flax and this would have been much greater in the 18th century prior to the decline of the weaving trade in 1773 (Flynn & McCormack 1998, 30). Kilbeggan, Moate, Clara and Tullamore were the centres of weaving in Westmeath and Offaly. Flax for weaving was grown in abundance around Kilbeggan from Coola to Moycashel, and a bleach yard to facilitate this process is known to have existed close to the distillery (ibid., 31). The distillery is said to have been built in 1757 and this would have stimulated an increase in the growth of barley on the emerging estates around Kilbeggan (ibid.). Although grain may have been imported from a wider area, it is probable the majority of barley was received from Kilbeggan's immediate hinterland. By 1782 three distilleries and a small mill on the River Brosna were in operation in Kilbeggan (ibid.).

Kilbeggan also fulfilled an important function as a mail coach centre. The town was built on the main route to Galway and in the 18th century road improvements increased the volume of traffic on the route. Prior to the 1760's the trustees and then the Grand Jurys initiated a number of road improvement schemes around the town. The built environment of Kilbeggan also reflected this function. In the 18th century the town possessed two hotels, a livery stable, a coachstop, coach agents and a carmans stage (ibid., 31).

In 1835–1837 the Kilbeggan Grand Canal branch was opened which increased the speed and scale at which industry and population were expanding in the town. A larger distillery, a brewery, two flourmills and an oat mill opened after the canal. The parish is recorded at this time as containing 6085 acres with a population around the town of 1,800 (ibid. 31) with the economy split between agriculture and industry. The Parliamentary Gazetteer of 1844 described the town as containing squalid cabins and new slate built houses, probably a reflection of the growing industrialisation and mixed economies of the time. The industries around the town employed 184 families while 149 were employed by agriculture. The town expanded to include a police barracks, post office, market house, two hotels, a parish church and a fair green (ibid., 32).

3.7 Recent Landscape History

Comparisons were made between the Ordnance Survey first edition 6" maps dating to the middle of the 19th century (c. 1837) and the 1914 revision. These were compared against field walking observations and notes made during testing and excavation (CRDS 2004) to give a recent landscape history of the immediate area around the excavation in Stonehousefarm.

General observations between the two OS editions note that a large number of field boundaries were created between 1837 and 1914. In general these are concentrated at the southern limits of Stonehousefarm townland. These boundaries seem consistent either with the division of larger fields for modern pasture and grazing purposes and, in some cases, the allocation of small plots for residential use.

Bellmount estate has remained intact since 1914 with very minor exceptions, however all planting around its field boundaries has been removed with only some dispersed woodland surviving towards its southern limit. This is a feature throughout the townland generally where field planting around field boundaries or lane margins has been consistently removed.

A small field is located in the low-lying peat basin to the northeast of Stonehousefarm 2 and the 1938 edition indicates small rectangular plantation set within the field. The nature of this feature is not clear but it is not present on the 1914 edition. The boundary between the fields in which Stonehousefarm 2 and Stonehousefarm 5.1 & 6 are located is indicated as and unenclosed track in 1837, but has been formalised into a boundary along the eastern side of the tack by 1914. This track serviced a small

village/farm complex in the north-western corner of the field in which Demesne or Mearsparkfarm 2 is located and is indicated on both map editions.

The 1837 map shows a small rectangular enclosure on the southern side of the boundary between Stonehousefarm 6 and Demesne or Mearsparkfarm 2, which is not indicated on the 1914 edition and was not identified in testing or excavation. Along the townland boundary itself a double-bank and hedgerow has been removed and replaced by a modern post and wire fence along the line of the original boundary. These works were undertaken in the 1970s when the field in which Demesne or Mearsparkfarm 2 is located was added to the farm in Stonehousefarm by the Land Commission. The land was formerly in a farm/estate called Keating's and the clearance was part of the land redistribution. At the same time the small village or farm complex in Demesne or Mearsparkfarm was cleared from the northwest corner of the same field.

4. Archaeological Excavations

4.1 Methodology

In advance of the excavations the proposed excavation cuttings were enclosed within post and wire fencing with gated entrances. This was designed to protect the excavations from trespass and prevent injury to farm animals. The sites in close proximity from Demesne or Mearsparkfarm 2 to Stonehousefarm 3 were enclosed in a corridor of fencing with access left to facilitate the movement of livestock. Except where necessary, the fencing often did not extend to the limit of the road-take footprint in order to minimise the impact on landowners.

Prior to the commencement of the excavations areas of topsoil were stripped from above each of the archaeological sites and from a 5m buffer area around the features. The extent of the buffer for each site was agreed in advance with the Westmeath County Council Project Archaeologist. This stripping process involved re-establishing the location of sites identified during the Centreline Testing using GPS. The areas to be stripped were then demarcated on the ground and mechanically stripped using 2m wide toothless ditching buckets under archaeological supervision. Topsoil was stripped to the surface of archaeological deposits. In a number of cases the initial stripping indicated that the archaeological deposits were more extensive than indicated by the Centreline Testing or that additional features were present. At Stonehousefarm 3 an additional burnt pit was identified in the buffer area around the known site. Following consultation with the Project Archaeologist further stripping was undertaken until the limit of features present was exposed. The full extent of Stonehousefarm 3 was contained within the limit of the road-take. In total an area of c. 11,250m^2 was mechanically stripped and assessed between the nine excavations and the Testing Areas (see below). The area of stripping for each site is indicated on the individual site plans and listed below:

Number	Site	National Grid	Area
A001-010	Stonehousefarm 1	233910, 234065	223m^2
A001-011	Stonehousefarm 2.1 & 2.2	233930, 234340	861m^2
A001-012	Stonehousefarm 3	233880, 234270	360m^2
A001-013	Demesne or Mearsparkfarm 2	234270, 234320	2,413m^2
A001-054	Kilbeggan South 1.2	233600, 234200	203m^2
A001-076	Stonehousefarm 4	233800, 234240	121m^2
A001-077	Stonehousefarm 5.1	234080, 234360	156m^2
A001-078 & 079	Stonehousefarm 6.1 & 6.2	234160, 234340	2,261m^2

The spoil generated from stripping and excavations was stockpiled in archaeologically sterile areas within the road-take footprint.

The site survey was carried out using a Topcon FC-1000 GPS to an accuracy of +/- 5cm. Sites were set out using the national grid at 10m or 5m intervals, however, some of the smaller sites were recorded using a local grid which were later converted to national grid in the post excavation phase. A topographical survey was also carried out on certain sites to produce contour lines.

Once exposed, features of archaeological potential were cleaned and cleared by hand of any remaining topsoil and subsoil. At this stage some features within a site such as root disturbance were dismissed as non-archaeological and excluded from further work. The remaining features were numbered and excavated, with half-sections excavated through deposits and fills as appropriate. To avoid confusion with excavations running concurrently, separate blocks of feature numbers were allocated to each site to avoid duplication. Features were drawn to scale in plan and section, and photographs and samples were taken.

Features were fully exposed within the excavation cuttings and, in general, one hundred percent excavated. Narrow baulks were retained through the fills of some cut features to facilitate the drawing and recording of sections.

Features were recorded on standardised CRDS Ltd. recording sheets for cuts, fills, walls, skeletal remains etc. Registers of features, finds, samples, photographs and drawings were also maintained, supported by site diaries. These records form the written site archive ensuring preservation by record of the sites. The resulting data was transferred to a computerised record system to facilitate the preparation of the current report.

On completion of the excavations the sites were secured for Health and Safety purposes. This involved mechanically backfilling deep pits, ditches and sumps and grading vertical faces and baulks over 0.5m in depth. Fencing erected to facilitate the excavations remained in place as the excavation cuttings were not backfilled and the spoil heaps remained in place.

4.2 Results of Archaeological Excavation

This site was identified during testing 51m to the south of the centreline at chainage 29895. The field was in use for grazing and silage production prior to the archaeological testing and an area enclosing the site was fenced to facilitate the excavation. The site was situated to the northwest of a farmyard halfway up a steep north facing slope above an area of low-lying boggy land. The slope on which the site was located forms part of a pronounced glacial ridge beginning to the east of Stonehousefarm farmhouse and continuing and lessening in gradient in the direction of the current N52. The site is located on the steepest part of the ridge where it rises over 5m in a distance of *c.* 30m. Stonehousefarm 4 was located 91m to the west-southwest in the same field, on the southern side of the glacial ridge. Stonehousefarm 2 was located in the adjacent field *c.* 70m to the north on a low-lying area at the base of the slope overlooking a basin of peat. This basin contains peats over 1m in depth at its edge within the road-take and continues to the north. These peats overlie a shell marl indicating the former presence of a lake and it is likely that the peats are of greater depth further into the basin. An area of 360m^2 was mechanically stripped around the feature identified during testing to expose the full extent of the archaeological site. The stripping revealed a number of north-south orientated agricultural furrows and a second feature 5m east of the pit identified during testing. The extent of stripping was extended to include this new feature and the resulting cutting was rectangular in shape and measured 16m north-south and 21m east-west. The features were covered by an average depth of 0.4m of topsoil, though the northern side of the cutting was deeper due to the steep slope on which the site was situated. Each of these features was fully excavated and recorded, the results of which are outlined below. The stripping of this site exposed the large sub-rectangular pit (Pit 1) identified during testing and revealed a second smaller pit (Pit 2) 4.8m to the east of the first as well as a number of agricultural features. A full register of the features from this site is included in Appendix 4 and on the site matrix.

Natural

The natural F611 underlying the topsoil, subsoil and archaeological features was composed of firm yellow-brown sandy clay with occasional stones.

Early Medieval Pit 2

Figs. 6-7, Plate 3-4

Pit 2 (F608) was a large sub-rectangular cut orientated north-northwest to south-southeast, located in the western half of the cutting. It measured 2.4m long north-south, 1.33m wide east-west and up to 0.39m in depth. It was cut into the slope of the hillside/ridge and so was deeper at the southern end than at the northern. It had a sharp break of slope on top with almost concave sides and a gradual

break of slope at the bottom, which gave way to a flat base. The base and sides of the cut were composed of highly oxidised red natural F611, which was numbered separately as F609. This ranged from dark red to pink in colour and was up to 0.04m in depth. A small cavity in the northeast corner of the cut was initially identified as a possible stake hole but it contained no fill and showed no signs of burning similar to that in the main cut.

The primary fill F606 was loose black charcoal which contained some large individual pieces. It was up to 0.18m in depth extending up the sides of the pit and thicker and more friable at the northern end. The charcoal was sampled (A001-012:F604:S600 & S601.1) and a single large piece was sampled for wood technology (A001-012:F606:S601.2) although it was shown that no tool marks were present (O'Carroll, Appendix 9). The wood being used was Oak (from both samples), and radiocarbon dating has yielded a date of 939±33BP (1030-1170AD) putting it firmly at the end of the Early Medieval Period. The upper fill F605 was composed of a silty-clay up to 0.38m in depth with charcoal flecks which filled the remainder of the cut above the charcoal.

Pit 1

Figs. 6-7, Plate 2

Pit 1 (F607) was identified during the stripping back of the topsoil 4.8m east of Pit 2 (which was identified during testing). It was a shallow pit located in the eastern half of the cutting and measured 1.9m long, 1m wide and 0.14m in depth. Its original shape was most likely oval orientated northwest-southeast but it was truncated to the east and west by two north-south orientated agricultural furrows, F601 and F603. F607 was cut into the slope with the result that it was deeper to the south than to the north. It had an almost imperceptible break of slope at the top with concave sides and a gradual break of slope at the bottom, which gave way to a concave but uneven base. There were a small number of stones against the side at the southern end. The base of the cut was composed of highly oxidised red natural F611 indicating that burning *in situ* had occurred. It contained a single fill F604 of loose black charcoal with some sand, pebbles and stones. The charcoal was sampled (A001-012:F604:S600) for palaeo-environmental analysis. Unlike Pit 2, where Oak was present, Alder was the timber being used in Pit 1 (Appendix 9). The upper levels of the fill were somewhat mixed with the overlying soil (F610) and the fills of the furrows, however the lower levels were almost pure charcoal.

Agricultural activity

Figs. 6-7, Plate 1

A series of nine furrows orientated north-south were located across the central portion of the site. Two of these truncated Pit 2 and were assigned cut numbers F601 and F603. None of the furrows could be traced to the northern or southern edges of the cutting and it appeared that they only survived in deeper soils. They ranged from 2.3- 9.1m in surviving length, 0.40- 0.75m wide and 0.02- 0.14m in depth. The interval between the furrows was 0.35- 2m and two of the five furrows between the pits converged, suggesting that more than one episode of cultivation was represented. Furrows F601 and F603 truncated Pit 1 (F607) on the eastern and western sides respectively. Each of these measured approx. 0.56m wide and varied in depth from 0.2m to 0.15m. Fills F600 (of furrow F601) and F602 (of furrow F603) were very similar sandy clays with flecks of charcoal disturbed from the fill of Pit 1 (F604).

Subsoil and topsoil

The soil F610 covering the archaeological features and natural was a dark-brown silty-clay with stones, pebbles and occasional charcoal flecks. It was deeper (up to 0.4m in depth) down slope towards the northern side of the site.

4.3 Archaeological Finds

No archaeological finds were recovered from this site.

4.4 Archaeological Samples

Samples were taken from the charcoal rich fills F604 of Pit 1 (F607) and F606 of Pit 2 (F608). These samples were submitted for wood identification (identified as Alder and Oak respectively) and a sub-sample of F606 (the fill from Pit 2), was selected for radiocarbon dating (939±33BP = 1030-1170AD). A piece of charcoal from F606 was examined for toolmarks but none were shown to be present (O'Carroll, Appendix 9).

Priority	Context	Sample No.	Material	Feature Type	Float	Specialist
1	F606	601.1 & 601.2	Charcoal	Fill of pit F608	N	Wood identification and dating
2	F604	600	Charcoal	Fill of pit F607	N	Wood identification

5. Conclusions

The principal features identified by the excavation were charcoal production pits, and with the aid of radiocarbon dating we can place these at the end of the Early Medieval Period (939±33BP or 1030-1170AD). Oak was used in Pit 2, while Alder was the preferred timber in Pit 1. Such pits are being identified in increasing numbers in recent years and they are interpreted as relating to the production of charcoal to be used in the processing of iron ore. Their construction can be speculated to be associated to activities related to Kilbeggan Abbey nearby.

Charcoal production is relatively simple process and the earliest examples date to the period before 500 BC in the Iron Age (IAC 2004). The method involves the excavation of a shallow pit less than 0.5m in depth. In some cases a post was placed upright in the pit and wood was stacked around it, filling the pit and rising to over 1m above ground. This clamp of wood was then encased in clay to make the sides airtight and a hole was left open at the top. Where an upright post was used this was then removed to leave a vertical cavity or, where it was not used, this was achieved by careful stacking and layering of the wood. Hot charcoal from a subsidiary hearth was then poured into the cavity and used to ignite the clamp. The entire process was dependant on controlling the amount of air in the clamp so that the wood was 'roasted' and not burnt to ash. The firing could take 1-2 days and required constant tending to ensure that clay sides did not dry or crack allowing excess air to enter and a blaze to develop. It was for this reason that the stools used by charcoal burners had only one leg - in the event that they fell asleep, they would fall over. Once the firing was completed, the hole at the top of the clamp was sealed with earth to extinguish the smouldering charcoal. When the clamp had cooled sufficiently it was broken open and the charcoal was extracted, allowing the pit to be reused if necessary.

The charcoal was used in a bowl furnace for the processing of iron ore and evidence for both associated activities has been recovered from recent excavations elsewhere in Westmeath (see Appendix 7). These simple furnaces were constructed over a small pit which was filled with charcoal and ore. It was then sealed with a clay facing and oxygen was added to the burning contents using flues or bellows. The bellows were attached to the furnace using a tube of fired clay called a 'tuyer', evidence for which was found at Clonfad 6.3 during the Centreline Testing (CRDS 2004). Only a small percentage of the iron became molten and the process principally cooked the ore by burning off impurities to produce a 'bloom' of semi-purified iron and liquid slag which gathered at the base of the

furnace. The bloom was in turn forged in a hearth which further removed the impurities producing workable iron and a distinctive form of slag. This form of furnace generally went out of use on the continent during the Roman period but there is evidence that it continued in small scale use in Ireland up to the medieval period. Industry of this type is typically seen as local in scale or practised by a farmer or group of farmers to supply their own needs.

The iron ore used was principally limonite or 'bog iron' which would have been sourced locally within the region. Deposits of the ore occur naturally in bogs and can form layers over a metre in depth. It is produced when iron silicates in the underlying rocks and soil are dissolved by the acid of the bog and, after a series of intermediate reactions, precipitated in the peat as a hydrous oxide rich in manganese (Feehan & O'Donovan 1996, 99–100). This is an ongoing process and after each extraction these deposits can regenerate in 15- 30 years making it a self-renewing resource. Bog iron contains a significantly higher proportion of manganese then other ores and this burns, helping to purify the bloom in a bowl furnace despite the relatively low temperatures achieved.

The small area of bog at the base of the hill on which Stonehousefarm 3 was located did not produce evidence for iron deposits during the Centreline Testing. It is composed mainly of fen peats, which are alkaline in character and do not dissolve the iron silicates in the underlying soils. If the site was intended to supply charcoal to a furnace it is likely the ore source was in one of the larger peatland areas in the region. There is a low-lying valley of peat to the north in Skeahanagh townland, and very large areas of peatland to the south and east. At Toar Bog, south of Tyrrellspass, extremely extensive deposits of bog iron are still present on the eastern side of the bog (IAWU field notes).

The size and form of Pit 2 (F608) at Stonehousefarm 3 accords well with previously excavated examples from the region such as Hardwood 3, Co. Meath and Kinnegad 2, Co. Westmeath (IAC 2004; Appendix 7). The charcoal remaining in the pit differed from the northern and southern ends with larger pieces to the south and a more friable charcoal fill to the north. This may have been caused by raking or scooping the charcoal out of the deeper southern end, down slope to the northern end for collection and use elsewhere. Both the extent of oxidisation of the underlying soil and the depth of charcoal suggest that it was used on a number of occasions. Pit 1 (F607) was smaller and more disturbed but it seems likely that it was used on fewer occasions. Together they represent a series of charcoal production events suggesting an ongoing or recurrent activity. Given that Pit 1 was discovered during the stripping of Pit 2, it is probable that similar sites remain to be identified in the untested areas within

the road-take footprint. It should be noted, however, that these represent indirect evidence of iron working and that no slag or other related evidence was recovered from the testing or excavations.

One of the reasons for the location of the site may have been the availability of wood to supply the charcoal production. The steep sides of the glacial ridges would have been of little use for agricultural production, however, they are an ideal environment for the growth of hazel woodland. Such woodland can be cropped in a rotation of 4- 11 years dependant on the size of the crop required and, like the bog ore, would have been self sustaining.

As indicated above, charcoal production pits have a long history and simple forms from different periods cannot be distinguished. The full extent of the production may not have been identified and the locations of any associated features such as furnaces have not been established.. However the date of 939±33BP (1030-1170AD) would suggest that the closest extant archaeological sites in the area with which they may have been associated are a ringfort in Stonehousefarm townland, located 400m to the east-southeast, and the Early Medieval monastic site and Medieval abbey at Kilbeggan. Indeed it is tempting to suggest that both pits are associated to the latter establishment.

References

Published Sources

Armit, I, Murphy, E., Nelis, E. & Simpson, D. (Eds) 2003. Neolithic Settlement in Ireland and Western Britain. Oxbow Books: Oxford.

Bell, M. 1984. A contribution to the study of cultivation ridges in Ireland. *Journal of the Royal Society of Antiquaries of Ireland* 114, 80–97.

Bennett, I. (Ed.) 2003. *Excavations 2001: summary accounts of archaeological excavations in Ireland*. Wordwell: Bray.

Bennett, I. (Ed.) 2004. *Excavations 2002: summary accounts of archaeological excavations in Ireland*. Wordwell: Bray.

Boate, G. 1652. *Irelands Natural History*. John Wright at the Kings Head in the Old Bayley: London

Brindley, A. & Lanting, J.N. 1989/90. The dating of fulachta fiadh. In Buckley (Comp.) *Burnt Offerings: international contributions to burnt mound archaeology*, 55–56. Wordwell Ltd. - Academic Publications: Dublin.

Brindley, A.L., Lanting, J.N. & Mook, W.G. 1990. Radiocarbon dates from Irish fulachta fiadh and other burnt bounds, *Journal of Irish Archaeology* 5, 25–33.

Brunskill, R.W. 1990. *Brick Building in Britain*. Victor Gollancz: London.

Buckley, V. 1990 Experiments using a reconstructed fulacht with a variety of rock types: implications for the petromorphology of fulacht fiadh. In Buckley (comp.) *Burnt Offerings: international contributions to burnt mound archaeology*, 170–172. Wordwell Ltd. - Academic Publications: Dublin.

Caulfield, S. 1983. Megalithic tombs in their environmental setting: a settlement perspective. In T. Reeves-Smyth & F. Hammond (Eds) *Landscape Archaeology in Ireland*, 195–215. British Archaeological Reports (British Series) 116. Oxford.

Clutton-Brock, J. 1984. *Neolithic Antler Picks from Grimes Graves, Norfolk, and Durrington Walls, Wiltshire: a biometrical analysis. Excavation at Grimes Graves, Norfolk 1972–1976, Fascicule 1*. British Museum Publication: London.

Conway, Fr. C. 1958. *The Story of Mellifont*. H.M. Gill: Dublin.

Cooney, G. 2003. Rooted or routed? Landscapes of Neolithic settlement in Ireland. In I. Armit, E. Murphy, E, Nelis & D. Simpson (Eds) Neolithic Settlement in Ireland and Western Britain, 45–55. Oxbow Books: Oxford.

Cooney, G. & Grogan, E. 1994. *Irish Prehistory: a social perspective*. Wordwell Ltd.: Bray.

Cross-May, S., Murray, C., O'Neill, J. & Stevens, P. (forthcoming) Classifications and parallels. In *The Lisheen Archaeological Project, 1996-98*. Margaret Gowen & Co. Ltd.

Delaney, C. 2001. Deglaciation and the landscape of the Irish Midlands. In Irish Quaternary Association, *Ice and the Irish Landscape: programme and abstracts for the Annual IQUA Symposium 2001*, 9. IQUA: Dublin.

de Paor, L. 1969. Excavations at Mellifont Abbey, Co. Louth. *Proceedings of the Royal Irish Academy* 68C, 109–164.

Doody, M. 1991. Bronze Age settlements. In M. Ryan (Ed.). *The Illustrated Archaeology of Ireland*, 100–103. Country House: Dublin.

Eogan, G. 1965. *A Catalogue of Irish Bronze Swords*. The Stationary Office: Dublin.

Eogan, G. 1983. *Hoards of the Irish Later Bronze Age*. University College Dublin: Dublin.

Eogan, G. 1994. *The Accomplished Art: gold and gold working in Britain and Ireland during the Bronze Age (c. 2300–650 BC).* Oxbow Monograph 42. Oxbow Books: Oxford.

Feehan, J. & O'Donovan, G. 1996. *The Bogs of Ireland: an introduction to the natural, cultural and industrial heritage of Irish Peatlands*. The Environmental Institute, University College Dublin: Dublin.

Flynn, K. & McCormack, S. [1998]. *Westmeath 1798: a Kilbeggan Rebellion*. [Locks Distillery Museum]: Kilbeggan.

Grogan, E. 2002. Neolithic houses in Ireland: a broader perspective. *Antiquity* 76(292), 517–525.

Grogan, E. & Eogan, G. 1987. Lough Gur excavations by Seán P. Ó Ríordáin: further Neolithic and Beaker habitations on Knockadoon. *Proceedings of the Royal Irish Academy* 87C, 299–506.

Gwynn, A. & Hadcock, R.N. 1988*. Medieval Religious Houses: Ireland, with an appendix to early sites*. Irish Academic Press: Dublin.

Harbison, P. 1968. Catalogue of Irish Early Bronze Age associated finds containing copper or bronze. *Proceedings of the Royal Irish Academy* 67C, 35–91.

Harbison, P. 1969a. *The Daggers and Halberds of the Early Bronze Age in Ireland*. Prahitorische Bronzefunde, Abteilung VI, Band 1. C.H Beck: Munich.

Harbison, P. 1969b. *The Axes of the Early Bronze Age in Ireland*. Prahitorische Bronzefunde, Abteilung IX, Band 1. C.H. Beck: Munich.

Lawless, C. 1990. A fulacht fiadh Bronze Age cooking experiment at Turlough, Castlebar. *Cathair na Mart* 10(1), 1–10.

Lewis, S. 1837. *A Topographical Dictionary of Ireland Vol. I*. S. Lewis & Co.: London.

Lucas, A.T. 1965. Washing and bathing in ancient Ireland. *Journal of the Royal Society of Antiquaries of Ireland* 95, 65–114.

Malim, T. 2001. Place and space in the Cambridgeshire Bronze Age. In J. Brück (Ed.) *Bronze Age Landscapes: tradition and transformation*, 9–22. Oxbow Books, Oxford.

McDermott, C. 1995. Fulacht fiadh in Bofeenaun townland, Lough More, Co. Mayo, in *Blackwater Survey & Excavations, Artefact Deterioration in Peatlands, Lough More, Co. Mayo*, 187–196. Transactions of the Irish Archaeological Wetland Unit 4. Crannóg Publications: Dublin.

O'Drisceoil, D. 1988. Burnt mounds: cooking or bathing? *Antiquity* 62, 671–80.

Ó Drisceoil, D. 1991. Fulacht fiadh: a general statement. *North Munster Antiquarian Journal* 33, 3–6.

O'Kelly, M.J. 1954 Excavations and experiments in ancient Irish cooking-places. *Journal of the Royal Society of Antiquaries of Ireland* 84, 105–56.

Ó Ríordáin, S.P. 1954. Lough Gur excavations: Neolithic and Bronze Age houses on Knockadoon. *Proceedings of the Royal Irish Academy* 56C, 297–459.

Ó Ríordáin, B. & Waddell, J. 1993. *The Funerary Bowls and Vases of the Irish Bronze Age*. Galway University Press: Galway.

O'Sullivan, M & Downey, L. 2004. Fulacht fiadh. *Archaeology Ireland* 17(4), 35–7.

Pavía, S. & Bolton, J. 2002. *Stone, Brick & Mortar: historical use, decay, and conservation of building materials in Ireland*. Wordwell Ltd.: Bray

Pender, S. (Ed.) 1939. *A Census of Ireland, circa 1659 with supplementary material from the poll money ordinances (1660-1661).* The Stationary Office: Dublin.

Raftery, B. 1983. *A Catalogue of Irish Iron Age Antiquities*. [Philipps-Universität Marburg, Vorgeschichtliche Seminar]: Marburg.

Sheehan, J. 1978. *South Westmeath Farm and Folklore*. Blackwater Press: Dublin.

Simington, R.C. 1931. *The Civil Survey AD 1654-1656 County Meath, Vol. V*. The Stationary Office: Dublin.

Stout, M. 1997. *The Irish Ringfort*. Irish Settlement Studies No.5. The Group for the Study of Irish Historic Settlement/Four Court Press: Dublin & Portland.

Stout, M & Stout, G. 1997. Early Landscapes: from prehistory to plantation; recovering the hidden landscape. In F.H.A. Aalen, K. Whelan & M. Stout (Eds) *Atlas of the Rural Irish Landscape*, 31–63. Cork University Press: Cork.

Walsh, P. 1985. *Ancient Westmeath*. Lilliput Pamphlets Series 4. The Lilliput Press Ltd.: Mullingar.

Walsh, P. 1957. *The Placenames of Westmeath*. Dublin Institute for Advanced Studies: Dublin.

White, N.B. 1943. *Extents of Irish Monastic Possessions 1540 1541*. Stationery Office: Dublin

Woods, J. 1907. *Annals of Westmeath Ancient and Modern and The Whig Featheration*. Sealy, Bryers and Walker: Dublin.

Unpublished & Other Sources

CRDS 2004, N6 Kinnegad to Athlone Dual Carriage, Advance Archaeological Investigation, Contract 2: Tyrrellspass to Kilbeggan. Report commissioned by Westmeath County Council.

Egan, O. 2004. N6 Kinnegad to Athlone Dual Carriageway Scheme Draft Archaeological & Historical Background Phase 1: Kinnegad to Kilbeggan. Westmeath County Council.

IAC Ltd. 2004. Archaeology and the M4 Kilcock-Enfield-Kinnegad Motorway, Counties Kildare, Meath, Westmeath. www.nra.ie/Archaeology/ ArchaeologyonRoadSchemes/d1555.PDF

Riada Consult, Westmeath County Council 2004, N6 Kinnegad to Athlone Dual Carriageway Environmental Impact Statement.

Sites and Monuments Record, National Monuments Division, The Department or Environment, Heritage and Local Government

The Irish Stone Axe Project Database. Department of Archaeology: UCD.

www.excavations.ie

Appendix 1

Recorded Archaeological Sites and Monuments

The recorded archaeological sites from the Sites and Monuments Records for Co. Westmeath in the vicinity of the excavated sites are listed below. The area examined covers a radius of approximately 2.5km from the excavated sites. The townlands examined were Aghuldred, Ballinderry Big, Brownscurragh, Cappalahy, Demesne or Mearsparkfarm, Hallsfarm, Kilbeggan, Kilbeggan South, Skeahanagh, Stonehousefarm, Tonaphort. All monuments are listed in a standard format as follows:

List of Sites and Monuments:

Townland	SMR No.	Classification	NGR Easting	NGR Northing
Description				

Kilbeggan	WM038-017---	Town	233360	235370
Description				

Kilbeggan	WM038-01702-	Abbey (site)		
Description				

Kilbeggan	WM038-01701-	Graveyard	233140	235250
Description				

Skeanhagh	WM038-027---	Earthwork (site)	235530	234520
In pasture, at the top of a rise. Good views in all directions. A levelled circular enclosure, delimited by a very low profile trace of an earthen bank. A NNW to SSE field boundary possibly truncated the western side of this site.				

Stonehousefarm	WM038-028---	Ringfort	234250	234110
Diameter of site NE-SW is 21m. This is a roughly circular site enclosed by 2 banks, the inner one being wider. The inner bank seems original. There is a possible entrance to the south. The interior of the site is saucer shaped but with a general slope down from N to S. There is no evidence of structures. The site is on poor pasture land and the land around is boggy, especially to the South. There are scarps outside the site marking the edge of this boggy land. There is a large limestone boulder just outside the site which shows signs of water erosion. (B.R 23/8/77) The earthwork consists of a low outer bank, inside this is a fairly wide shallow fosse. This is a very wide low bank inside the fosse. This inner area encloses an area approx. 19m in diameter N-S. The site is partly overgrown with trees and bushes. The earthwork is situated in rather low lying rushy pasture land. (J. Reynolds 24/10/73)				

Appendix 2

Previous Archaeological Investigations from the area

A search was conducted of the online Excavations Database (www.excavations.ie) to identify previously excavated archaeological sites in the area surrounding the current excavations. More recently published sources such as Excavations 2001 and Excavations 2002 (Bennett 2003; 2004), N6 Athlone – Kinnegad Archaeology & Cultural Heritage (Casey 2002) and the report on the N6 Kinnegad to Athlone Dual Carriage, Advance Archaeological Investigation, Contract 2: Tyrrellspass to Kilbeggan (CRDS 2004) were also consulted. A small number of insubstantial sites were resolved during the testing. The excavations are listed in a standard format as follows:

Townland/Site Number Site type Author	Year: Excavation No. National Grid Source
Description	

Demesne or Mearsparkfarm 3 Pit/post pit CRDS	2004: 04E0879 234564, 234340 CRDS 2004
Deep narrow linear shaped pit (L 1.1m, Wth 0.52m, D 0.3m) containing decayed and burnt stone, charcoal and a silt fill with inclusions of burnt clay and a mid-grey colour. Partially covered by redeposited natural that contained the same inclusions but to a lesser extent. Undercut at western end, and the axis of the undercut means that any post or stake would have been placed in the feature at an approximately 45 degree angle. Fill similar to burnt mound material, and so may be cast-in from a mound. Located in cornfield, on a level plateau.	

Demesne or Mearsparkfarm 4 Burnt mound CRDS	2004: 04E0879 234693, 234394 CRDS 2004
A thin oval shaped spread of burnt mound material (L 10.75m, Wth 6.7m, D 0.15m), containing frequent charcoal and heat-shattered stones overlying a natural of orangey brown sandy silt. The spread is intermittent and no evidence for a trough or hearth was recorded. Located towards the base of a slope adjacent to bog. A horse skeleton was uncovered in the fill of a field boundary 9m to the south.	

Demesne or Mearsparkfarm 5 Cruciform pit CRDS	2004: 04E0879 234815, 234354 CRDS 2004
Cruciform shaped pit (L 5.35m, Wth 4.1m, D 0.51m) containing three fills with the middle layer rich in charcoal. The sides of the cut are slightly irregular, the base is deep and concave and the side 'arms' are shallow. Located on the side of a moderately sized hill overlooking an area of wetland.	

Demesne or Mearsparkfarm 6.1 Burnt mound material CRDS	2004: 04E0879 234950, 234387 CRDS 2004
A small, shallow roughly circular spread of burnt mound material (L 3.8m, Wth 2.5m, D 0.15m), containing frequent amounts of charcoal and heat shattered stones. Located up slope from a boggy area two transects from F27. Two adjacent areas of brown, silty clay appear unrelated and may represent disturbance.	

Demesne or Mearsparkfarm 6.2 Shallow pit CRDS	2004: 04E0879 234917, 234391 CRDS 2004
A shallow irregularly shaped pit (L 1.54m, Wth 0.92m, D 0.2m) containing a fill of grey clay with some charcoal and burnt stone similar to a burnt mound. It has an irregular-concave profile that is deeper to the south and gradually shallower to the north. It varies from 0.06-0.20m in depth. It is located up slope from a boggy area two transects from F26.	

Demesne or Mearsparkfarm 6.3 Burnt mound material CRDS	2004: 04E0879 234982, 234374 CRDS 2004
A small, shallow, crescent shaped deposit of burnt mound material (L 4.45m, Wth 3.05m, D 0.15m), containing frequent amounts of charcoal and heat shattered stones. It is located up slope from a boggy area, 5m north and down slope of a possible hearth F29 which may be related. F30 is located at a similar level on the slope one transect to the east.	

Demesne or Mearsparkfarm 6.4 Possible hearth CRDS	2004: 04E0879 234982, 234368 CRDS 2004
A hearth (L 1.65m, Wth 1.15m) defined on one side by oxidised clay with large stones around the edges. Contains charcoal and stones. It is located up slope from a boggy area, 5m south and upslope of a spread of burnt mound material F28 that may be related. F30 is located at a similar level on the slope one transect to the east.	

Demesne or Mearsparkfarm 6.5 Burnt mound CRDS	2004: 04E0879 234996, 234372 CRDS 2004
A large deposit of burnt mound material (L 11.5m, Wth 7.4m, D 0.2m) containing frequent charcoal and heat-shattered stones, which appears to be deeper up slope. It is located on a hill of moderate size at the edge of a boggy area. F28 & F29 are located at a similar level on the slope one transect to the west.	

Demesne or Mearsparkfarm 7.1 Possible trough CRDS	2004: 04E0879 235018, 234425 CRDS 2004
Partially exposed oval pit (L 0.59m, Wth 0.33m, D 0.12m) with a burnt timber at the base and filled with grey clay beneath a thin horizon of peat. Possibly a trough though no obviously associated burnt mound was found in the immediate vicinity. A small burnt mound (F42) is located in an adjacent transect and there is burnt mound activity in field 239 and the field immediately to the west. Located on ground overlooking an area of bog.	

Demesne or Mearsparkfarm 7.2 Burnt mound CRDS	2004: 04E0879 235032, 234436 CRDS 2004
A small, shallow deposit of burnt mound material (L 7.4m, Wth 3.85m, D 0.15m), containing charcoal and heat shattered stones. Some of the limits are poorly defined and the spread is not uniform across the area. Located on a steep slope overlooking an area of bog at the end of the transect. A possible trough (F41) is located in the adjacent centreline trench.	

Demesne or Mearsparkfarm 8.1 Three deposits of charcoal CRDS	2004: 04E0879 235077, 234438 CRDS 2004
Three small, thin deposits of charcoal and ash like material (L 3.6m, Wth 1.9m, D 0.06m) located at the topsoil/subsoil boundary. F43 is was 1.2m from F43b and 2.6m from F43c with a distance of 1.6m from F43b to F43c. It is likely that these deposits represent peripheral or disturbed material from the spreads of burnt mound material *c.* 20m to the south in the opposing transect. Further less well contexted occurrences of charcoal noted in adjacent transects. This feature was resolved with no finds recovered and it was not possible to recover a securely contexted dating sample. F43a: A slight sub-circular depression (0.6x0.2x0.01m) with uneven sides and a fill of grey clay and charcoal. F43b: A slight sub-circular depression (0.4x0.22x0.02m) with uneven sides and a fill of dark-brown silty sand topsoil with charcoal and ash like material. F43c: A narrow depression (0.46x0.08x0.06m) with steep sides and a pronounced concave base and a fill of grey clay, charcoal and ash like material.	

Demesne or Mearsparkfarm 8.2 Shallow pit containing burnt mound material CRDS	2004: 04E0879 235082, 234398 CRDS 2004
A small circular depression (L 1.16m, Wth 0.67m, D 0.11m) with an uneven, concave base of orange oxidised clay indicating burning. It contained a dark fill of clay, charcoal and stone similar to burnt mound material. It is likely that this feature was a hearth related to the spreads of burnt mound material (F45) 8.4m to the north in the same transect. The feature was resolved with no finds and no dating sample due to its proximity to a substantial site.	

Demesne or Mearsparkfarm 8.3 Spreads of burnt mound material CRDS	2004: 04E0879 235075, 234410 & 235080, 234412 & 235084, 234410 CRDS 2004
Up to eight exposures of burnt mound material (L 14.2m, Wth 13.1m, D 0.1m) located in the transect and two parallel extra trenches. The material consisted of frequent charcoal and heat shattered sandstone, though these elements were less frequent in places, and the colour of the deposits varied. It was not possible to determine which of the exposures formed single features without further disturbance to the site and the area as a whole was recorded as a single zone. The spreads cover *c.* 40% of the area exposed with intervals of up to 2m between the deposits. Situated up slope from bog to the north and 8.4m from a shallow burnt pit with burnt mound material (F44) to the south. Three localised areas of burning (F43) were resolved in the opposing transect to the north.	

Hallsfarm 1 Spreads of burnt mound material CRDS	2004: 04E0879 233554, 233681, 233562, 233697, 233566, 233701 & 233568, 233710 CRDS 2004
A large spread of burnt mound material (L 22.03m, Wth 13.09m, D 0.05m) identified in two transects and two extension trenches in Field 222 and in a transect on the opposite side of the roadway in Field 223. Both fields are under arable cultivation and the site is extensively eroded by modern ploughing. Transect N52.5-585-E in Field 223 contained two small deposits of burnt mound material (L 0.85-0.9m, W 0.52-0.85m) 5m apart and a shallow depression with an organic fill 12.3m further to the north. All of these contexts are the edge of the trench adjacent to the field boundary and extensions were not possible. A linear cut with a fill of blue clay (W 0.7m) ran the length of the transect on the south side and appears to relate to drainage or the former brickworks in the area. The transects and extensions in Field 222 contain ploughed out burnt mound/s. The greatest concentrations of burnt stone and charcoal towards are at the centre of the spreads and there are occasional stones and charcoal in the surrounding area. Recent plough marks cut through the material in transect N52.S-T600-E. No evidence for a trough/s was apparent in the areas exposed.	

Hallsfarm 2.1 Burnt pits CRDS	2004: 04E0879 233591, 233780 &233592, 233779 CRDS 2004
Two burnt pits 1.95m apart, a patch of burnt clay and small concentrations of charcoal in the vicinity. F96a is located at the junction of the centreline and N52.S-T590-W and F96b at the start of N52.S-590-E. The pits are similar to F111 in Field 221. Located on the lower slopes of a hill with a burnt mound (F97) located 8.2m to the west.	

F96a: An oval pit (3.4x2.45x0.2+m) with a rim of oxidised clay *c.* 0.03m wide with charcoal concentrated at some points around the edge. The base curves and there is a rich horizon of charcoal at a depth of 0.13m below a fill of mottled grey/orange clayey-silt with frequent charcoal. 1.95m to the southeast of the pit is a small area of charcoal with burnt clay around the edges (0.64x0.33x0.02m).

F96b: A sub-circular pit (1.35x1.14m) with oxidised clay around the edges similar in size and fill to F96a. Three shallow linear features with charcoal rich fills run from the edge of the pit to the northwest and southeast.

Hallsfarm 2.2 Burnt mound and pit CRDS	2004: 04E0879 233579, 233781, 233581, 233784 & 233585, 233789 CRDS 2004

A partially ploughed out burnt mound and a three possible pits/post-holes (L 16.8m, Wth 10.9m, D 0.1m) in the transect and two paralleled extension trenches. The mound is rich in charcoal and burnt stone but only survives to a shallow depth. It is most concentrated in two areas in the transect and northern extension with thin spreads over the remaining areas. Two possible pits/post-holes (diam 0.3-0.65m) are located 0.15m apart between the concentrations in the transect. A third possible pit is located in the southern extension trench defined by oxidised clay and charcoal (0.6x0.2m). No evidence for a trough was apparent in the areas exposed. Two large burnt pits (F96) are located 8.2m to the east.

Hallsfarm 2.3 Burnt clay and charcoal deposits CRDS	2004: 04E0879 233580, 233830 CRDS 2004

An area of oxidised clay and charcoal, a deposit of charcoal and small spreads of charcoal in the area (L 4m, Wth 1.75m, D 0.1m). The oxidised clay is 'T'-shaped (1.3x1.0x0.03m) outlining an area of charcoal. This is adjacent to an irregular, patchy charcoal deposit (2.0x1.0x0.03m). There are a number of smaller charcoal spreads in the immediate area and charcoal flecking in the surrounding soil. Located on the lower slopes of a hill, 39m from F111 in the opposing transect.

Hallsfarm 2.4 Burnt pit with flue CRDS	2004: 04E0879 233620, 233816 CRDS 2004

A burnt pit (1.5x0.95x0.15+m) defined by oxidised soil and charcoal around the edges and with a possible flue (0.85x0.5m) at the north-western end. Fill of mid-brown sandy silty with frequent charcoal and some large stones. Similar to burnt pits (F96a&b) in Field 222. Located on the lower slopes of a hill, 39m from F99 in the opposing transect.

Hallsfarm 3 Small burnt pit or hearth CRDS	2004: 04E0879 233614, 233896 CRDS 2004

A small oblong burnt pit or hearth (1.5x0.7x0.07+m) similar to F96a&b in Field 222 but on a smaller scale. It is orientated northwest-southeast and defined by a rim of oxidised clay with a fill of mid-brown silty-sand but with no charcoal. Situated on the side of a hill rising to a crest in Field 220 and upslope from other burnt features in Field 221.

Kilbeggan, Main St No archaeological significance Frank Ryan, 41 Parnell Road, Harolds Cross, Dublin 12.	1992 2332, 2351 excavations.ie

The site was monitored prior to construction of premises in accordance with a condition of the notification of decision to grant planning permission.
Foundation trenches were dug with a J.C.B. to natural subsoil. Nothing of archaeological interest was present.

Kilbeggan, Old Graveyard Abbey (site) (SMR 038-01702) Alan Hayden	2003:03E1503 Egan 2004

Recent archaeological work was carried out to the south of the town in the vicinity of the old graveyard at Reilig field, which, revealed various medieval deposits. Test excavations and an extensive geophysical survey (Hayden A. Licence 03E1503, McCarthy M, GeoArc Ltd. 2003) of the area revealed the location of the Cistercian abbey to the west of the graveyard, which, included a church, cloister, chapter house and other buildings. To the east and south of the graveyard two fulachta fiadh, a grain drying kiln and associated hearth, numerous drainage features, infillled gullies and ditches and a possible medieval field system were revealed. The archaeological assessment of the area also concluded that the early medieval ecclesiastical site

may extend into the area west of the graveyard but the majority of the site probably lies beneath the graveyard. The grain drying kiln is thought to be of early medieval date and therefore associated with the early medieval ecclesiastical site.

Kilbeggan, Tullamore Road Town (SMR 038:017) Dominic Delany, 31 Ashbrook, Oranmore, Co. Galway.	1999: 99E0062 23336, 23537

Test excavation was undertaken before the construction of two proposed dwellings at Tullamore Road, Kilbeggan, Co. Westmeath, on 6 February 1999. The site is adjacent to a recorded monument. Five test-trenches (average length 40m) were excavated, and two stone-lined drains, a pit and a circular, stone-lined well, all modern, were encountered. No archaeological deposits or features were found.

Kilbeggan, Main St No archaeological significance (SMR 038:017) Sebastien Joubert, Horge house, Camp, Co. Kerry.	2001: 01E0787 23336, 23537

Pre-construction testing was carried out at Main street, Kilbeggan, in August 2001, prior to the construction of a residential extension to the rear of the Ramble Inn Pub. The site was in the zone of archaeological potential associated with the town.

Three test-trenches were mechanically opened. No archaeological deposits or features were encountered. All deposits recorded were of recent date and it was supposed that the site had been disturbed in recent times. Plastic objects were found in the third test-trench on top of the boulder clay, 0.9m below ground level.

Kilbeggan South 1.1 Burnt pit CRDS	2004: 04E0879 233591, 234202 CRDS 2004

A small, oblong/oval burnt feature (measuring 1.7m by .75m) located *c.* 6.5m west of F101. A slot section excavated through it revealed a depth of 5-6cm. The cut has sloping sides and a gradual break of slope at the top and base which is very slightly concave. The feature contained a single fill consisting of a grey sandy clay mixed with burnt clay and charcoal. It contained a concentration of sub-rounded stones with maximum dimensions of 6cm. The fill contained slightly more charcoal towards the base and was slightly more mottled yellow in colour. This has been interpreted as the fill getting mixed with the subsoil rather than a separate filling action. The feature does not display a large amount of vitrified clay or burning along the base of the feature. As such it is more likely to be associated with a period of isolated burning, although it may have some related function to the pit furnace F101.

Kilbeggan South 1.3 Charcoal spread CRDS	2004: 04E0879 233558, 234190 CRDS 2004

A charcoal spread located to the west of F100 and F101, which measured 1.8m x 0.8m x 0.01m. The spread consisted of a damp charcoal lens with occasional fire reddened clay. The charcoal was quite organic and woody. The date or function of this feature could not be ascertained.

Skeahanagh 3 Pit burial (animal) CRDS	2004: 04E0879 235392, 234433 CRDS 2004

Oval pit containing an articulated sheep burial located east of a vernacular house and outbuildings (in ruins) in Field 242. The pit measures 1.26m x 0.69m and is 28cm in depth. The cut is orientated NW-SE and appears to consist of two separate cutting actions which are almost certainly contemporary. The main cut has almost vertical sides and a flat base, this was deepened, however, with a second more rounded cut that has a concave base and sloping sides. This second cut was probably intended to accommodate the animal. The fill was a mid-brown clayey silt mixed with a large amount of brown, compact, slightly sandy silt. This was yellow in colour with frequent grit inclusions and was consistent with the subsoil in the area. It probably represents the backfilling and immediate redeposition of the subsoil after the 'grave' was cut. Four vertebrae were retained (04E0879:4-7) and were subsequently identified as sheep (M. McQuade, pers. comm.). The date of the feature could not be ascertained.

Skeahanagh 4 Burnt mound CRDS	2004: 04E0879 235223, 234496 CRDS 2004
A deep burnt mound (L 6.1m, Wth 4.85m, D 0.4m) immediately below the sod which appears to survive to full depth. The mound is composed of heat shattered stone and charcoal in a matrix of dark sand and silt. The highest part of the mound is a crest on the southern side before it falls away steeply to the underlying mineral soil. Much of the stone in the mound is sandstone. It is located on the margin of the bog sitting on the subsoil on the southern side and in the peat on the northern side. Outwash from the mound occurs on the surrounding soils to the south and in the peats. The mineral soil beneath the mound slopes downward rapidly and the peat is over 1.2m in depth immediately to the north of the site. A natural timber, roots and small wood fragments were noted in the peat none of which had indications of woodworking. No evidence for a trough or hearth was noted although the full surface of the site was not exposed.	

Stonehousefarm 5.2 Localised burning CRDS	2004: 04E0879 234064, 234335 CRDS 2004
Oval shaped area of oxidised natural (L 0.64m, Wth 0.36m, D 0.02m) indicating localised burning. Located below a topsoil of mid-brown sandy-silt (D 0.17m) and a subsoil of light brown sandy-silt (D 0.07m). The natural is an orangey-brown sandy clay and the feature was identified by a marked reddening of the clay. Located close to the field boundary between Fields 231/232 upslope from deep peats in Field 231. No further archaeological features or finds in the immediate area and no samples could be taken for dating purposes. This feature is resolved.	

Appendix 3

Archaeological Finds from the area

A search was undertaken of the files of the National Museum of Ireland, Kildare Street, Dublin 2 and of a range of published catalogues of prehistoric material: Raftery (1983), Eogan (1965; 1983; 1994), Harbison (1968; 1969a; 1969b) and the Irish Stone Axe Project Database. The townlands examined were Aghuldred, Ballinderry Big, Brownscurragh, Cappalahy, Demesne or Mearsparkfarm, Hallsfarm, Kilbeggan, Kilbeggan South, Skeahanagh, Stonehousefarm, Tonaphort. No archaeological finds were identified from these sources. A number of artefacts were recovered from the area during the completion of the N6 Kinnegad to Athlone Dual Carriage, Advance Archaeological Investigation, Contract 2: Tyrrellspass to Kilbeggan (CRDS 2004) and these are summarised below in a standard format as follows:

Museum No. / Reg-No.	Townland/Site Number
Classification Notes	

04E0579:01	Stonehousefarm 1
Brown Ware sherd Ceramic sherd with brown glaze (5.5x5.2x1.1cm). Recovered *ex situ* at C18th (?) house.	

04E0579:02	Stonehousefarm 1
Brown Ware sherd Ceramic sherd with brown glaze (3.0x2.3x0.6cm). Recovered *ex situ* at C18th (?) house.	

04E0579:03	Stonehousefarm 1
Crockery Ceramic sherd (4.9x2.9x0.3cm). Recovered *ex situ* at C18th (?) house.	

04E0579:04-07	Skeahanagh 3
Sheep vertebrae Four vertebrae samples from a sheep burial in a pit.	

04E0579:08	Ardnaglew 3
Retouched flint flake Flint flake with retouched edge (4.3x3.9x0.3cm). Possible scraper. Recovered during testing of a burnt mound.	

04E0579:09	Kilbeggan
Poss. Medieval iron knife Iron knife (11.2x2.1x0.3cm) with broken straight-backed blade (L 5.6cm) and width increasing to break (1.6-2.1cm). Pronounced rounding and thickening (L 0.9, diam. 1.1-1.4cm) between bland and tang (L 5.2cm). Recovered from topsoil. Possibly Medieval.	

04E0579:14-15	Demesne or Mearsparkfarm 2
Flint scraper/broken bland and a misc. flint fragment This site was excavated as part of the current project (A001-013) and these objects have been included in the catalogue of finds from the site. See Appendix 5.	

04E0579:16	Demesne or Mearsparkfarm
Saddle quern Sub-rectangular sandstone saddle quern (34.4x15.2x8.4cm; Weight *c.* 7kg) with large quartz pebble inclusions. Entire upper surface is ground and is longitudinally concave and transversely convex. Recovered from among stone fill in a field drain.	

Appendix 4

Feature Registers

Feature numbers have been taken out consecutively as needed starting from number F1. Each site was given an allocation of 100 feature numbers with these been allocated on order of excavation. The first 100 were given to Stonehousefarm 6. In the case that more than 100 contexts were encountered on a single site a second block of 100 numbers was taken out. This happened only in the case of Stonehousefarm 6 and Demesne or Mearsparkfarm 2 with the smaller sites been contained comfortably within a block of 100. The register contains as brief description of the feature, giving dimensions, shape, composition and texture. A number of feature numbers were given to features that were revealed as resulting from natural processes. These numbers have been retained in the record but are denoted as 'non-archaeological features (N.A.F).

A001-012 Stonehousefarm 3 Feature Register				
Feature	Feature Group	Feature Type	Dimensions	Level
F600	*Furrow*	Fill	L 3.31m, Wth 0.56m, D 0.14m	OD 71.922m
Description: A firm brown sandy clay with sand, pebbles, stones and some charcoal flecking. Interpretation: F600 was the fill of furrow cut F601.				
F601	*Furrow*	Cut	L 3.31m, Wth 0.56m, D 0.14m	OD 71.922m
Description: A linear furrow cut with a gradual break of slope on top, concave sides, a gradual break of slope and concave profile at the base. Filled by F600. Interpretation: F601 was the linear cut of an agricultural furrow orientated N-S. it cut through F604, fill of pit cut F607.				
F602	*Furrow*	Fill	L 8.75m, Wth 0.56m, D 0.02m	OD 71.552m
Description: A firm brown sandy clay with sand, pebbles, stones and some charcoal. Interpretation: F602 was the fill of furrow cut F603.				
F603	*Furrow*	Cut	L 8.75m, Wth 0.56m, D 0.02m	OD 71.552m
Description: A linear shaped furrow cut with an imperceptible break of slope at the top, concave sides, an imperceptible break of slope and concave profile to the base. It was filled by F602. Interpretation: F603 was the linear cut of a N-S orientated agricultural furrow. it cut through the fill F604 of pit cut F607.				
F604	*Pit 1*	Fill	L 1.9m, Wth 1m, D 0.14m	OD 71.932m
Description: A loose black charcoal fill with large amounts of charcoal and some sand, pebbles and stones. Sample (A001-012:F604:S600). Interpretation: F604 was the charcoal rich fill of pit cut F607.				

F605	*Pit 2*	Fill	L 2.4m, Wth 1.33m, D 0.38m	OD 72.258m
Description: A firm light brown, with yellow and orange flecking, silty clay with grit, some stones and large amounts of charcoal flecking. Interpretation: F605 was the tertiary fill, lying over the main charcoal fill F606, of pit cut F608.				

F606	*Pit 2*	Fill	L 2.4m, Wth 1.33m, D 0.18m	OD 71.758m
Description: A loose black charcoal which contained some large charcoal pieces. Sample (A001-012:F606:S601.1 & S606.2) Interpretation: F606 was the main charcoal fill of pit cut F608. it was thicker and in larger pieces in the deeper southern area of the pit and shallower, more friable in the north.				

F607	*Pit*	Cut	L 1.9m, Wth 1m, D 0.14m	OD 71.932m
Description: an irregularly shaped pit cut with an imperceptible break of slope at the top, concave sides, an imperceptible break of slope and concave profile at the base. It was filled by charcoal rich fill F604. Interpretation: F607 was the cut of a pit containing a charcoal rich fill, F604. there was evidence of insitu burning as the base of the cut was scorched red. F607 was truncated by furrows F601 and F603.				

F608	*Pit 2*	Cut	L 2.4m, Wth 1.33m, D 0.39m	OD 72.19m
Description: A sub rectangular pit cut with a sharp break of slope at the top, concave sides, a sharp break of slope and straight profile to the base. It was filled by F605, charcoal fill F606 and had red scorching at the base, F609. Interpretation:				

F609	*Pit 2*	Fill	L 2.4m, Wth 1.33m, D 0.04m	OD 71.678m
Description: a plastic red gritty clay with some stones. Interpretation: F609 was a layer of red scorched earth at the base of pit cut F608. Charcoal fill F606 lay directly over this scorched layer.				

F610	*Topsoil*	Topsoil	L ---m, Wth ---m, D 0.4m	OD ---m
Description: a dark brown silty clay with stones, pebbles and occasional charcoal flecks. Interpretation: F610 was the topsoil in the area of this site.				

F611	*Natural*	Natural	L ---m, Wth ---m, D ---m	OD ---m
Description: a firm yellow-brown sandy clay with occasional stones. Interpretation: F611 was the sandy clay natural subsoil in the area of this site.				

Appendix 5

Finds Registers

A find is numbered with a unique find number, which includes the excavation licence number, the feature number and an individual find number. Finds are numbered according to the feature they were found in. Therefore the find accession number must be read as a combination of licence number, feature number and individual find number.

A001-012 Stonehousefarm 3 Finds Register
No archaeological objects were recovered during this excavation.

Appendix 6

Register of Samples

Detailed below are the samples from this site which, subject to approval, will be processed. The method of analysis is also outlined. Details on the information it is anticipated will be gained from this analysis are outlined individual excavation reports.

A001-012 Stonehousefarm 3 Sample Register						
Sample Number	Material	Feature Type	Feature Group	Sampled %	Comments	Analysis
A001-012:F604:S600	Charcoal	Pit	Pit 1	*<5%*	Charcoal fill of pit cut F607. Pure charcoal not to be floated.	Bulk Charcoal ID
A001-012:F606:S601.1	Charcoal	Pit	Pit 2	*<5%*	Charcoal fill of pit possibly used for charcoal production contained large pieces of charcoal. Pure charcoal not to be floated. S601.2 is a charred worked end	C14 Charcoal ID; Bulk Charcoal ID
A001-012:F606:S601.2	Charcoal	Pit	Pit 2	*100%*	A charred worked end. 601.1 is the charcoal fill of pit possibly used for charcoal production contained large pieces of charcoal. Pure charcoal not to be floated.	Charcoal ID; Wood working

Appendix 7

Excavations of Comparable Sites

This appendix contains summary accounts of previously excavated sites comparable to those addressed in this report. These have been extracted from the online website www.excavations.ie for sites excavated up to 2000 and Excavations 2001 and Excavations 2002 (Bennett 2003; 2004) for subsequent excavations. The entries are listed in geographical order by county and subsequently by townland under the following themes:

Charcoal production sites and burnt pits

Waterford
2000:0995
N25 ROAD REALIGNMENT SCHEME, KILMACTHOMAS
Prehistoric
99E0622
Monitoring of the N25 Realignment Scheme from February to June 2000 followed a period of archaeological testing by Michael Tierney (see above No. 994) along the route of the new roadway. Five previously unknown sites were discovered, all relating to prehistoric domestic and/or industrial activity. The following is a list of sites excavated under the monitoring licence, for which Dúchas The Heritage Service did not require separate licences.

Chainage 7330, Graigueshoneen townland
Topsoil-stripping revealed eleven small, irregularly shaped spreads and a large, subrectangular, clay-lined pit, over an area measuring 10m north–south by 10m. The smaller spreads were subsequently revealed to be non-archaeological features, but the larger pit, which contained many large stones, including a possible mortar stone, was used for producing charcoal.

The pit was 1.92m long (north–south), 1.1m wide and 0.2m deep. The three fills contained within it strongly suggest that this was a pit constructed for charcoal production. It was clay-lined, contained hearth-type debris and had a top fill to act as capping. Despite reddening of the stones, there was no reddening of the edges of the pit to suggest a high heat process. This lends weight to the theory of a smouldering fire to produce charcoal but may also indicate that the pit fills were secondary and represent the dumping of hearth scrape-out episodes.

Chainage 8900/525, Carrignanonshagh townland
The site was stripped by bulldozer and remained as a thin spread of burnt stone and charcoal-rich sediment covering an area 4.8m long (north–south) and 3.4m wide. After insertion of a narrow sondage from the northern extent, this was found to extend at least 4m further north. Burnt mound material was visible in the east-facing section for a length of 9.4m overall and had a maximum depth of 0.62m in three distinct layers. A single stake-hole at the northern end of the site was excavated, but this was the sole archaeological cut feature revealed.

Chainage 9500, Carrignanonshagh townland
Topsoil-stripping revealed several features within an area measuring 10m north-east/south-west by 10m north-west/south-east. The site eventually comprised a small circular pit feature containing three fills, as well as a post-hole, a single stake-hole and two possible truncated post-holes. The circular pit in the centre of the site produced a single sherd of possible prehistoric coarseware.

Chainage 9630, Carrignanonshagh townland
The site comprised an oval pit containing a single fill of charcoal-rich material and fire-cracked stone. To the immediate east of this was a line of three post-holes orientated north-north-east/south-south-west. They increased in size from south to north and were evenly spaced at 1.3–1.4m apart. The sizes ranged from 0.24m to 0.64m in diameter.

Chainage 10760, Scrahan townland
Topsoil-stripping revealed a small subcircular feature containing charcoal-rich sediment and fire-cracked stone, a single stake-hole and a shallow linear feature containing numerous burnt stones, which lay to the north of the first feature. The circular feature produced two sherds of possible prehistoric coarseware. The site area on this occasion measured 5m north–south by 5m.
Stuart Elder, Eachtra Archaeological Projects, Ballytrisnane, Old Parish, Co. Waterford.

Westmeath
1876: Kinnegad-Enfield-Kilcock Motorway
Testing
266041 243446 to 255237 247985
02E0108
A total of 24 sites were identified during the environmental impact phase of the Kinnegad-Enfield-Kilcock motorway Scheme, Contract 1, in counties Meath and Westmeath. Thirteen of these (Sites 1, 10, 11, 84, 92, 94, 95, 96, 98, 99, 100, AE1 and AE3) were assessed by intensive trial trenching by Eoin Corcoran before the testing of the proposed route. This work was carried out under separate licenses.

The site inspection carried out at site 93 revealed that the possible bullaun stone was a natural piece of weathered stone lying outside the motorway corridor. There was a similar weathered stone within the field boundary to the west in the same field.

A total of 108 fields were tested. A single test-trench was excavated along the centre-line of the road-take. Additional test trenches were then excavated at right angles to the centre-line trench on alternate sides at 25m intervals. The position of additional trenches was often determined by the presence of archaeological features/potential archaeological features in the centre line trench.

Twenty sites were identified through the centre-line testing. The sites in County Westmeath consisted of possible slot –trenches, pits and spreads at Correlstown 1 (No. 1853 above); two pits and a ditch at Griffinstown 1 (No. 1868 above); a charcoal pit at Griffinstown 2 (No. 1869 above); pits, a possible hearth and linear features at Griffinstown 3 (No. 1870 above); a possible pit at Kinnegad 1 (No. 1877 below); pits and spreads at Kinnegad 2 (No. 1878 below); a pit at Kinnegad 3 (No. 1879 below); two pits at Kinnegad 5 (No. 1880 below); three possible pits at Kinnegad 5 (No. 1881 below). The County Meath sites consisted of a number of possible features at Rossan 1 and 2 (Nos 1523 and 1524 above); four pits at Rossan 3 (No. 1525 above); pits and deposits at Rossan 4 (No. 1526 above); linear features at Rossan 5 (No. 1527 above); pits, deposits and spreads at Rossan 6 (No. 1528 above); a pit and a linear feature at Hardwood 1 (No. 1464 above); a possible kiln at Hardwood 2 (No. 1465 above); possible pits, a hearth and linear features at Hardwood 3 (No. 1466 above); pits and a ditch at Ardnamullan 1 (No. 1412 above) and the remains of a ploughed out fulacht fia at Towlaght 1 (No. 1535 above).
Ian Russell, ACS Ltd, Unit 21, Boyne Buisness Park, Greenhills, Drogheda, Co. Louth.

Westmeath
1823: Aghamore
Ironworking
261227 246640
02E0869
Excavation was carried out between 21 June and 4 July 2002 on a site at Aghamore, Co. Westmeath, as party of the Bord Gáis Éireann Pipeline to the west project (Section 1A: Ballough to Kinnegad). The site was revealed during monitoring of topsoil-stripping and was recorded as two concentrations of features: both included an intense area of burning with a high charcoal content, and one had small amounts of iron slag.

A total of 22 archaeological features extending over an area measuring 25m north-south by 60m were excavated. They included nine 'ore-extraction' pits or scoops, three shallow sub-rectangular 'charcoal-making' pits, eight small 'bowl' furnaces and three shallow linear features. The 'ore-extraction' pits or scoops were the most interesting, as they were dug along the line of the distinct bands of compact grey/white sand in the subsoil, apparently with a view to extracting the natural iron-rich nodules that formed there.

No artefacts were recovered from the features, and so a definite date for the site will have to await a radiocarbon determination. However, the nature of the 'bowl' furnaces on the site suggests an early historic to medieval date. Similar features were recorded as 'smelting furnaces' at Baysdale in northeast England and were dated to the 14th century.
Emmet Byrnes, Margaret Gowen and Co. Ltd, 2 Killiney View, Albert Road Lower, Glenageary, Co. Dublin.

Westmeath
1850: Cloonagh (BGE 1B/73/1)
Pit
23677 24151
02E0615
This site was an isolated pit cutting natural subsoil. It measured .6m (east-west) by 1m and was .4m deep. It was filled with a friable, light brown, sandy clay with occasional inclusions of burnt limestone and charcoal flecking. There was evidence of in situ burning at the base.
Bernice Molloy, Margaret Gowen & Co. Ltd, 2 Killiney View, Albert Road Lower, Glenageary, Co. Dublin.

Westmeath
1878: Kinnegad 2
Multi-period smelting site
25823 24541
02E0926
Testing was carried out before construction of the proposed M4 Kinnegad-Enfield-Kilcock Motorway Scheme. In February 2002, during centre-line testing of the motorway carried out by Ian Russell (No. 1876 above, 02E0108, three pits, a post-hole and two spreads were identified. The site was designated Kiinnegad 2 and was excavated in July 2002.

Four large cuttings were opened in this field, and, although features were identified across the site, there was a notable concentration in the cutting in the north-western extent of the site. This cutting was on a prominent flat ridge, and almost 80% of the features were identified in this area alone. The features consisted of 26 pits, twelve post-holes, two stake-holes, four hearths, two linear ditches, furrows and spreads. The pits, mainly in the north-western corner of the site, were bordered by a linear V-shaped ditch, the fill of which contained animal bone. The ditch may be of antiquity, although a ditch 2m south of it appeared to be of recent date. Neither was present on the first- or second-edition OS maps.

The pits varied from circular to oval to linear, and some were filled with slag, suggesting that they were smelting pits. Other pits were charcoal filled, with oxidised bases and sides, and a selection of prehistoric pottery of mainly Bronze Age date was recovered from them.

In the same area medieval pottery of 13th-century date was recovered from the fill of a pit and from an oxidised spread. Five post-holes extending in a straight line were evident along the edge of the V-shaped ditch and may be the remains of a fence or boundary. Organic material including nuts and shells were recovered from a deposit adjacent to one of the charcoal pits.

Only a small number of pits were identifies in the three cuttings to the south-east, and some of these appeared to be modern. It was obvious that the main concentration of activity was on the flat ridge to the north. Where appropriate, charcoal samples were taken for radiocarbon dating, and it is likely that these will return dates ranging from the Bronze Age to the medieval period. It is probable that further pits survive outside the stripped area, and it is therefore recommended that this part of the road corridor be monitored during
Deirder Murphy, ACS Ltd, Unit 21, Boyne Business Park, Greenhills, Drogheda, Co. Louth.

Westmeath
1878: Kinnegad 3
Pit
25822 24554
02E0927
Testing was carried out before construction of the proposed M4 Kinnegad-Enfield-Kilcock Motorway Scheme. A single feature was exposed in an offset trench excavated by Ian Russell in the proposed road corridor (No. 1876 above, 02E0108). This was a single oval pit exposed at 0.38m below the sod. It was designated Kinnegad 3. A large area around the feature was stripped of topsoil to establish whether the feature formed part of a larger archaeological site or was isolated. Excavation revealed that the pit was indeed isolated, and it was filled with oxidised clay and charcoal. The feature measur4d 1.2m east-west by 0.8m and had a maximum depth of 0.3m. It was filled with clay silt with frequent inclusions of charcoal and oxidised clay

There was no evidence of associated features in this field, but it is possible that this feature represents the western limit of a prehistoric site in the adjacent field to the east (Kinnegad 2, No. 1878 above). There was insufficient charcoal in the fill to provide a radiocarbon date, and hence its association with Kinnegad 2 cannot be confirmed. It is highly unlikely that further features survive in this filed, as previous testing failed to identify any other potential archaeology.
Deirder Murphy, ACS Ltd, Unit 21, Boyne Business Park, Greenhills, Drogheda, Co. Louth.

Westmeath
2000:1018
MULLINGAR
Possible prehistoric pits, post-medieval agricultural features and undated rural industrial activity
00E0076
Area A, prehistoric and modern pits
249977 251214
Topsoil-stripping revealed a group of seven pits, which appeared to be randomly spaced, all cut into yellowish-brown, clay subsoil, grouped around a natural outcrop of limestone bedrock; no stratigraphic relationship existed between any of the features. During the excavation of the larger pits, modern white-glazed potsherds, glass, bone and brick fragments were recovered from their fills. These must be regarded as modern pits, possibly associated with the now-demolished dwellings that lay to the west, at the junction of the N4 and R156 roads. Excavation of the remaining pits showed them to be relatively insubstantial, each c. 0.1m deep with diameters ranging from 0.2m to 0.5m. All of the pits contained charcoal fragments, though only one showed evidence of in situ burning. Charred hazelnut (Corylus) shell was recovered from its fill. No finds were recovered during the cleaning up of the area or from the pit fills. These features have been interpreted as a mixture of modern and possible prehistoric activity; samples taken from the pit fills are awaiting analysis.

Area A2, possible prehistoric pit
250004 251218

Lying some 22m east of area A1 was a single shallow pit, irregularly rectangular in plan, 1.1m long north-east to south-west. Its width varied between 0.5m and 0.8m; it had a depth of 0.1m, containing one fill. The pit showed evidence of burning; the fill contained a high proportion of charcoal, while the base of the pit had been scorched by fire and oxidised to a redbrick colour. Initial examination of the flots from the samples taken from the fill has identified the presence of charred grain within the pit. No finds were recovered from the fill or surrounding area.

Area A3, industrial activity
249943 241211
This area was 30m west of Area A1 and consisted of three subcircular pits, Contexts 16–18, cut into the clay subsoil. The pits were between 0.8m and 1.4m in diameter and up to 0.2m deep. The fills of these pits were very similar, the upper fill being a black clay with charcoal inclusions over a sandy matrix around burnt limestone fragments. There was no evidence of in situ burning in any of the pits. No finds were recovered during the excavation of these features. These features were similar to those encountered in Areas B and H (see below No. 1021).

Area A4, agricultural drain
249989 251151
Topsoil-stripping in this area revealed a linear feature running north-east to south-west, between 1.5m and 1.75m wide and 0.4m deep. Initial cleaning of the site showed it to be a filled-in, stone-lined drain or culvert; this was exposed over a distance of 13m in the middle of the road corridor. This feature represents a modern, probably late 19th-century, agricultural drain. A stone-built culvert of roughly the same dimensions as this feature was observed some 100m to the west in fields to the north of the scheme, draining under the N4 and R156 and into the ditch adjacent to the Royal Canal.

Area B, industrial activity
250061 251102
Initial topsoil-stripping of this area revealed the presence of three large pits containing burnt stone and charcoal. Subsequent hand-cleaning of the area revealed the existence of a further five smaller pits, all exhibiting the same characteristics as the fills in the three pits exposed in Area A3. In addition, two other pits were revealed. In all, the pits were spread over an area measuring c. 18m by 16m. None of the pits showed evidence of having been subject to burning in situ; the burnt stone and charcoal had been placed into the pits when cool. The largest pit consisted of a cluster of interconnected pits. The shape and profile of the individual pits varied from circular with vertical sides to subcircular with irregular and undercut sides. All of these pits, while originally excavated individually, had infilled contemporaneously with layers of black silts and silty clays containing charcoal and burnt limestone. To the south-east side of the pit was a series of thirteen stake-holes; these were arranged, with the exception of four, in a row alongside the northern end of the pit, over a distance of 4.8m. While there was no corresponding row of stake-holes on the north-west side of the pit, there was a row of five stake-holes running into the pit. This row of stake-holes ran for 1.3m. Another group of five pits lay between this large pit and a circular shallow scoop, to the north-east. This pit, 1.5–1.7m in diameter and 0.1m deep, contained burnt limestone and charcoal.

Many of the pits containing charcoal and/or burnt limestone appeared to have been deliberately dug to the surface of the water-table and as a consequence contained waterlogged soils. Several finds were recovered from the pits, including a carved stone ring (a possible loom weight or spindle-whorl?), a metal perforated disc, a fragment of iron slag and corroded iron nails.

All of the features were cut by plough furrows. No datable artefacts were recovered from their fills. The find of a possible loom weight suggests that the pits may have been used for processing the raw materials for textile production, such as the soaking and fermentation of flax (Linum usitatissimum). The stake-holes may represent a wattle structure used for drying the processed material. Samples taken from the pit fills are awaiting analysis and may provide some evidence for the function of these pits.
Stephen Reed, Eachtra Archaeological Projects, 3 Canal Place, Tralee, Co. Kerry.

Appendix 8

Testing Report extracts for the excavated and associated sites

The following extracts from the Advance Archaeological Investigation, Contract 2: Tyrrellspass to Kilbeggan report (CRDS 2004) indicating the known status, extents and classifications of the features as identified during the centreline testing.

SITE NUMBER	FEATURE	TYPE
Stonehousefarm 3	F03	Burnt pit
FIELD	OWNER	STATUS
230	Frank Mee	Tested
TRENCHE/S	CHAINAGE	OFFSET
C.T29895-S	29895	51m
NGR	OD	DEPTH BELOW SURFACE
233881/234276	---	0.32
ASSOCIATED FEATURES	PLATES	FIGURE
---	---	Fig. 5.74
FINDS	ARCHIVE PHOTOS	ARCHIVE DRAWINGS
---	HPIM 0989, 0990, 0991	Trenching Sheet
LENGTH	WIDTH	DEPTH
3m	1.8m	0.08+m
DIRECTOR	RECOMMENDATION	
CMcD	Resolution	

An oblong shallow pit defined by oxidised clay and filled with a charcoal rich light silty sand with occasional small stones, some burnt. Larger pieces of charcoal at base of sondage- not bottomed. Similar to F06, whereas dismissed linear feature F04 was located 45m from the baseline.

Appendix 9

Wood Identification of Charcoal Samples at Stonehousefarm 3

Ellen O'Carroll MA Dip EIA Mgt

Site	Licence	Sample No	Feature No	Sample type	Idenification	Weight	AMS/Standard/Comment
Stonehouse -farm 3	A001-012	S600	F604	Charred wood	Alder	15g	Standard
Stonehouse -farm 3	A001-012	S601.2	F606	Charred wood	Oak, 25 tree rings	45g	Standard /Chisel pointed. No tooling
Stonehouse -farm 3	A001-012	S601.1	F606	Charred wood	All oak	200g +	Standard

Plate 1: General progress shot

Plate 2: F600, F602 & F607 pre-excavation

Plate 3: F605 & F606 pre-excavation

Plate 4: F605, F606, F608 & F609 mid-excavation

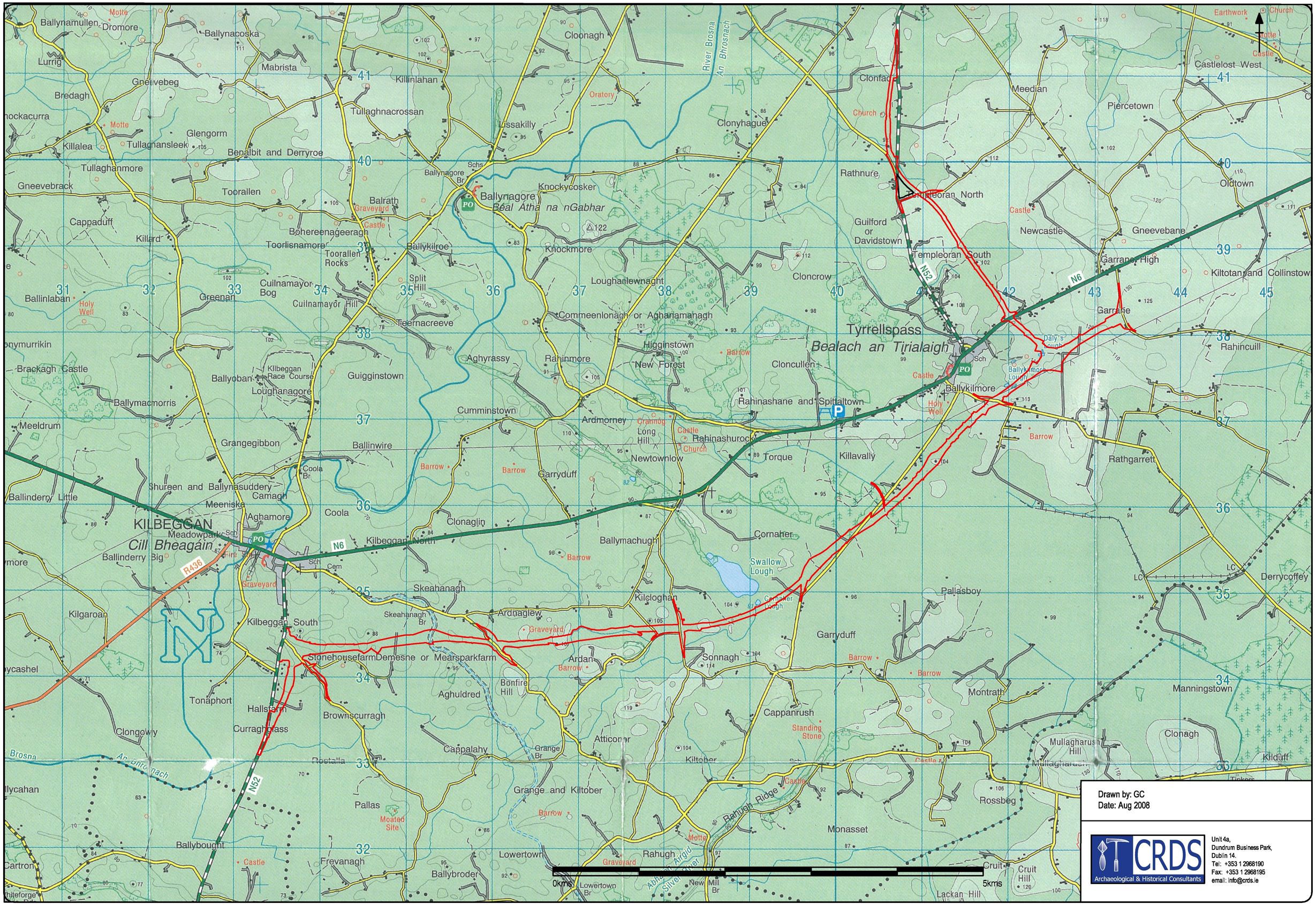

Drawn by: GC
Date: Aug 2008

CRDS
Archaeological & Historical Consultants
Unit 4a,
Dundrum Business Park,
Dublin 14.
Tel: +353 1 2968190
Fax: +353 1 2968195
email: info@crds.ie

Figure 1 : Extract from EIS showing extent of the road scheme

NDP
NATIONAL DEVELOPMENT PLAN

NRA
National Roads Authority

WESTMEATH COUNTY COUNCIL

National Roads Design Office
Civic Centre
Mullingar
Co. Westmeath
Tel: 044-9248
Fax: 044-9248

John Ahern
Chartered Engineer MIEI
Senior Engineer

Riada Consult
Kinnegad to Athlone

12-13 Cumberland St. Dunleoghaire, Ireland
Tel: (+353) 01 230 4460 Fax: (+353) 01 230 4465

Rev	By	Date	Description
D	AR	Jul '03	Final Environmental Impact Statement Issue

Project:	N6 Athlone - Kinnegad		
Component:	Proposed Route		
Title:	Location on Aerial Background		
Designed: Riada	File Name: 21812	Drawing No:	
Drawn: PJG	Original Scale: 1 : 10000	Figure 2	
Checked: MOS	Date: May 2003		

ORIGINAL SIZE A3

N

Field # 231

Field # 233

Field # 227

Field # 232

Field # 228

Field # 230

Field # 217

Field # 229

Field # 218

Field # 219

Stonehousefarm 1

Stonehousefarm 2

Stonehousefarm 3

Stonehousefarm 4

Stonehousefarm 5

Stonehousefarm 6

Additional test trenches/areas

Demesne or Mearsparkfarm 2

Kilbeggan South 1.2

Septic Tank

Fig 5.82

Fig 5.81

Figure 6

Figure 9

Figure 13

Figure 17

Figure 45

Figure 48

Figure 52

Figure 55

XT 51

XT 52

29655

29745

29835

29925

30015

30105

30195

30285

1200

1110

1020

930

350

270

180

69.0

73.4

72.7

72.1

1.83m FD

STONEHOUSEFARM

N6 Kinnegad to Athlone Dual Carriageway
Advance Archaeological Investigations
Contract 2: Kilbeggan to Tyrrellspass

NDP

NRA National Roads Authority

Cultural Resource Development Services Ltd.
Archaeological & Historical Consultants

CRDS Archaeological & Historical Consultants

Unit 4
Dundrum Business Park,
Dublin 14.
Tel: +353 1 2968190-3
Fax: +353 1 2968195
email: info@crds.ie

KEY

Extent of Contract 2
CPO
Centreline
Site Cut
Area not tested

Figure 3: Site Location Plan

Excavation Licence No: 04E0879	Status: Report Draft 3	Drawing No. & CAD File:	
Drawn: K Russell	Job No. 579		
Checked: CRDS	Scale: 1:2000		
Approved:	Date: 24 March 2005		

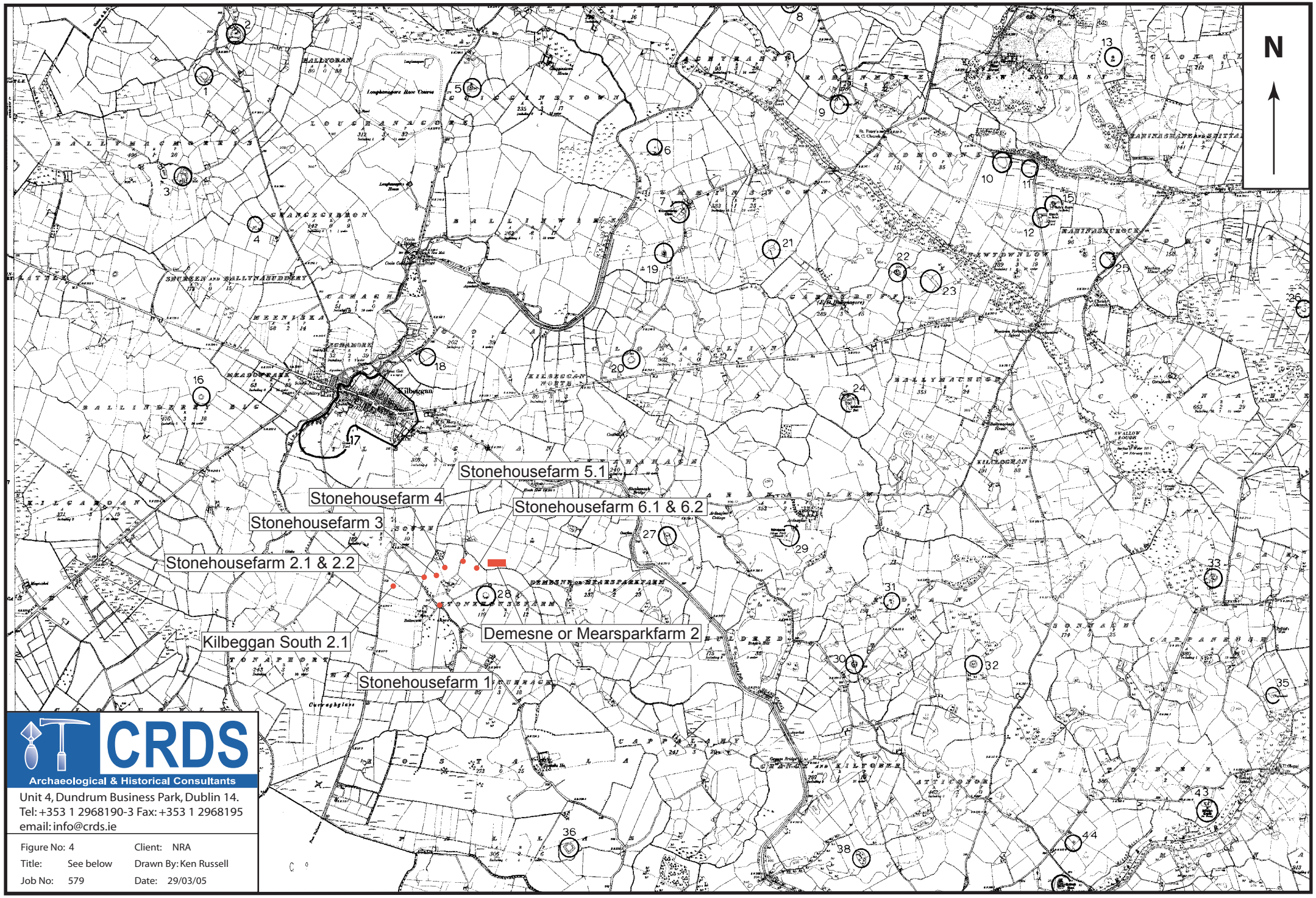

Figure 4: 1st Edition OS RMP Map showing location of Sites

Key:

CPO Line

Limit of excavation

Grid Point

Section line

Section Point

Feature edge

Contour Line

Context cut by another

Unclear edge

Fill

Cut

Hachure

Stone

Charcoal

Oxidized Natural

Section Number

Scale bar

CRDS
Archaeological & Historical Consultants
Unit 4, Dundrum Business Park, Dublin 14.
Tel: +353 1 2968190-3 Fax: +353 1 2968195
email: info@crds.ie

Figure No:	5	Client:	NRA
Title:	See below	Drawn By:	Ken Russell
Job No:	579	Date:	29/03/05

Figure 5: Key

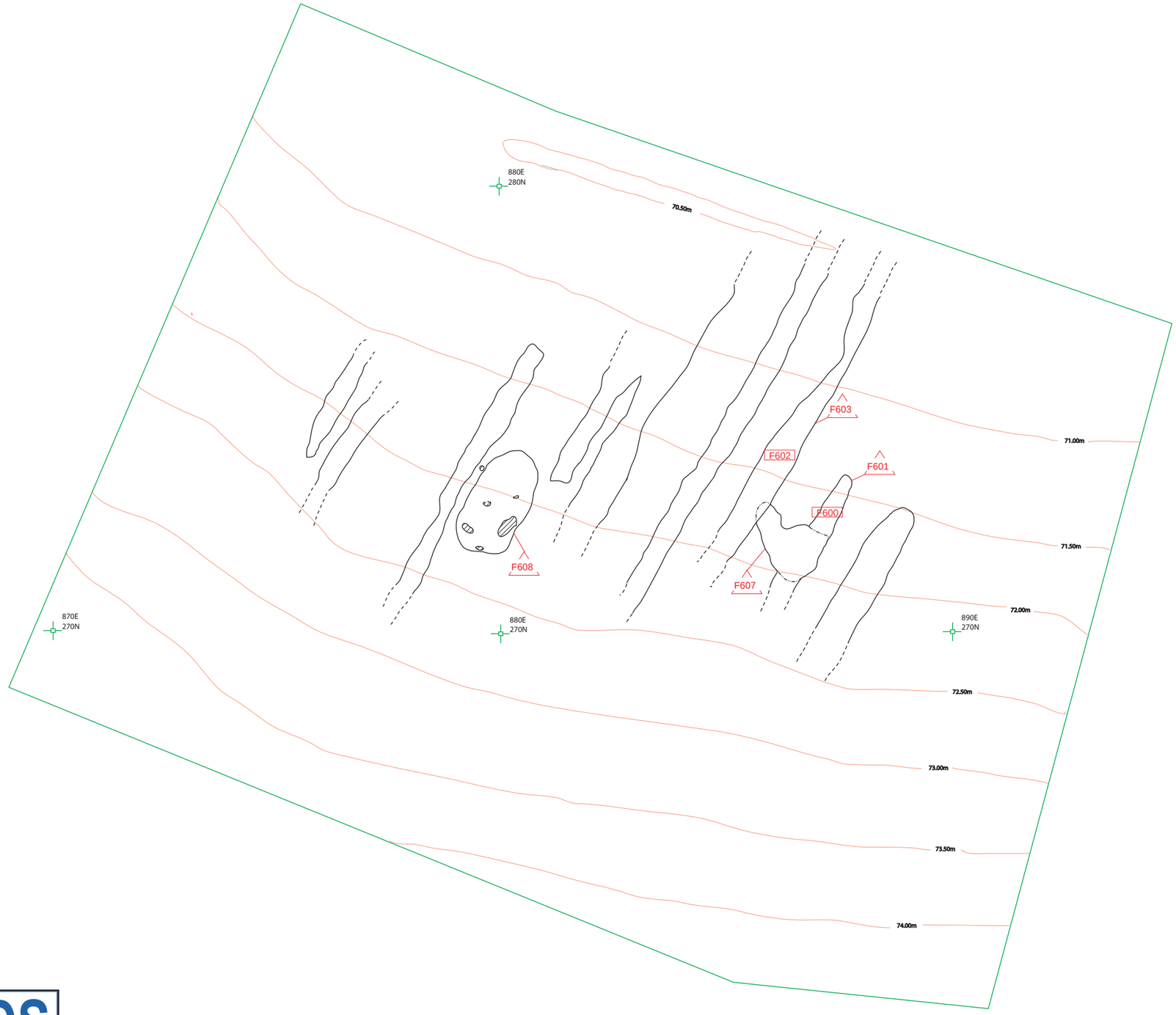

CRDS
Archaeological & Historical Consultants
Unit 4, Dundrum Business Park, Dublin 14.
Tel: +353 1 2968190-3 Fax: +353 1 2968195
email: info@crds.ie

Figure No:	6	Client:	NRA
Title:	See below	Drawn By:	Ken Russell
Job No:	579	Date:	29/03/05

Scale
0 0.5m

Figure 6: Stonehousefarm 3 - Pre-excavation plan

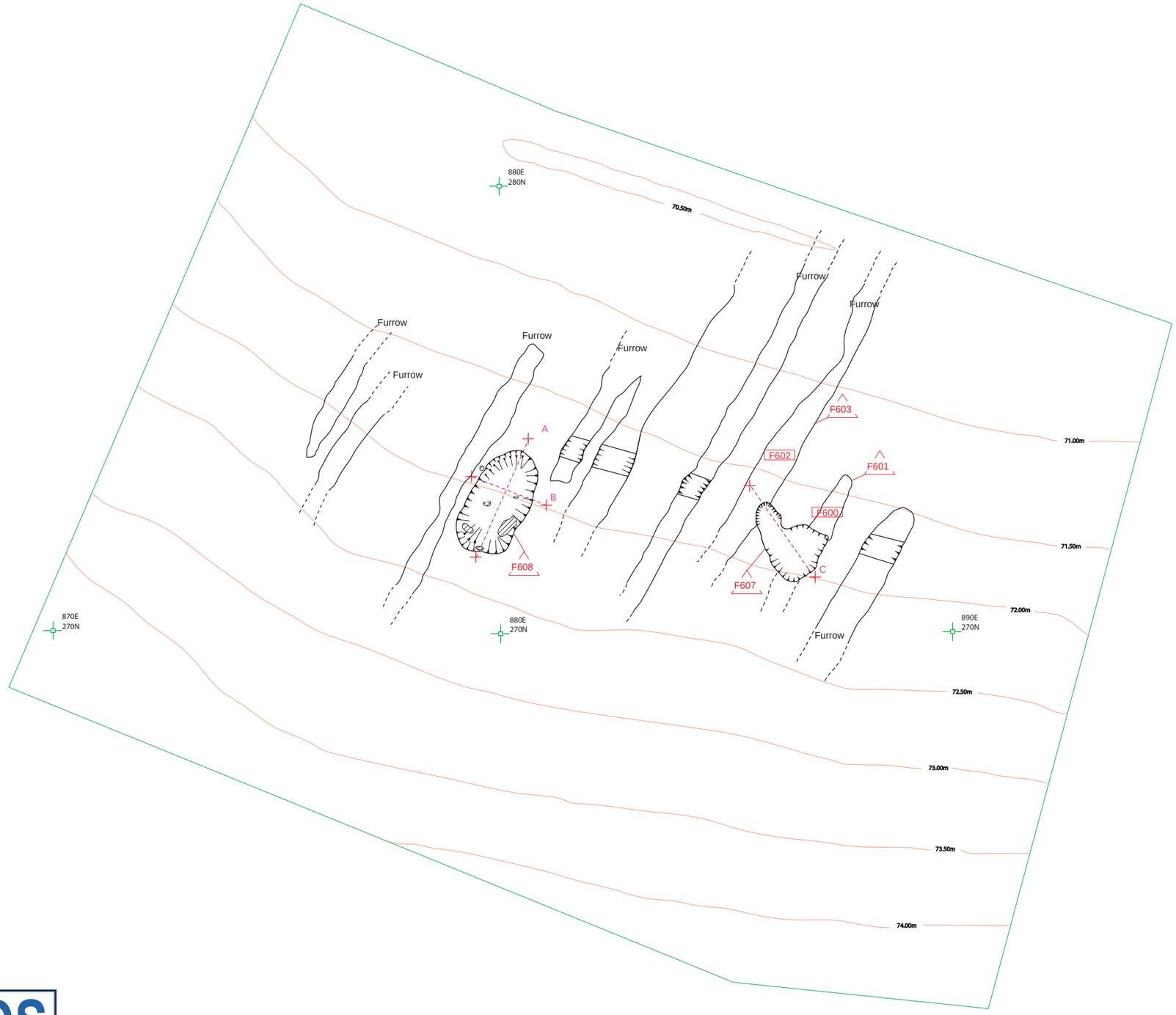

CRDS
Archaeological & Historical Consultants

Unit 4, Dundrum Business Park, Dublin 14.
Tel: +353 1 2968190-3 Fax: +353 1 2968195
email: info@crds.ie

Figure No:	7	Client:	NRA
Title:	See below	Drawn By:	Ken Russell
Job No:	579	Date:	29/03/05

Scale 1 :100
0 5m

Figure 7: Stonehousefarm 3 - Post excavation plan

Section A
A001/012
Stonhousefarm 3
Scale 1:20
W Facing section
of F605, F606, F608,
& F 609
72.38m OD

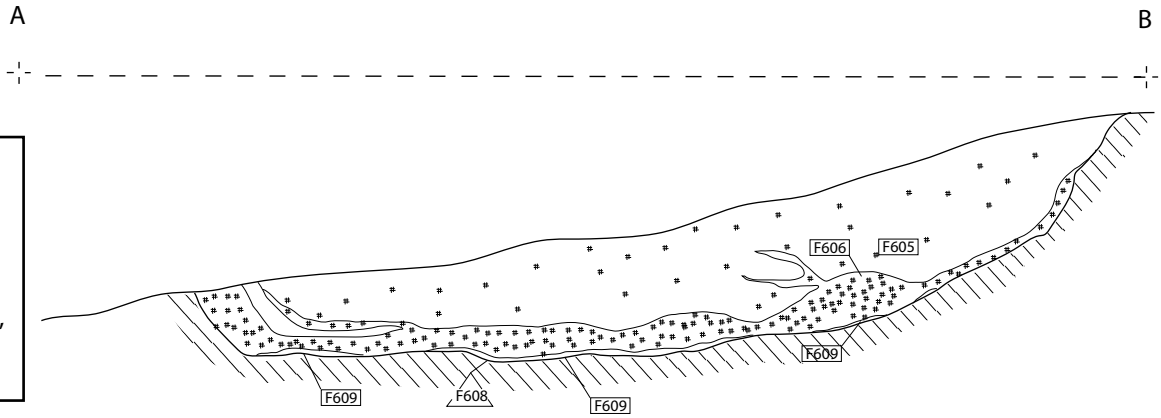

Section B
A001/012
Stonhousefarm 3
Scale 1:20
E -W profile
of F 608
72.11m OD

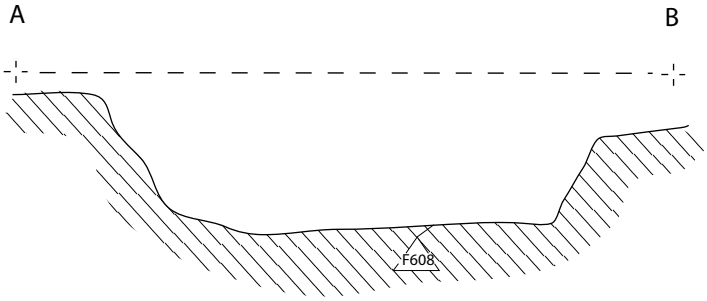

CRDS
Archaeological & Historical Consultants
Unit 4, Dundrum Business Park, Dublin 14.
Tel: +353 1 2968190-3 Fax: +353 1 2968195
email: info@crds.ie

Figure No:	8	Client:	NRA
Title:	See below	Drawn By:	Ken Russell
Job No:	579	Date:	29/03/05

Scale 1:20
0 1m

Figure 8: Stonehousefarm 3 - Sections

Section C
A001/012
Stonhousefarm 3
Scale 1:20
NEFacing section
of F600, F601, F602,
F603, F604 & F107
71.97m OD

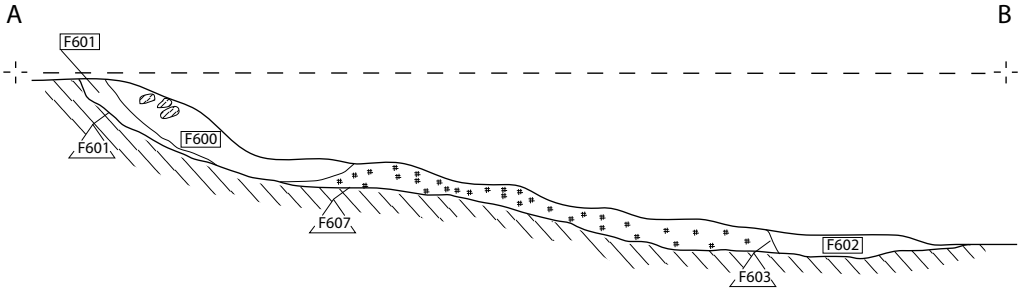

CRDS
Archaeological & Historical Consultants
Unit 4, Dundrum Business Park, Dublin 14.
Tel: +353 1 2968190-3 Fax: +353 1 2968195
email: info@crds.ie

Figure No:	9	Client:	NRA
Title:	See below	Drawn By:	Ken Russell
Job No:	579	Date:	29/03/05

Scale 1:20
0 1m

Figure 9: Stonehousefarm 3 - Sections

A001/012 Stonehousefarm 3
Site Matrix

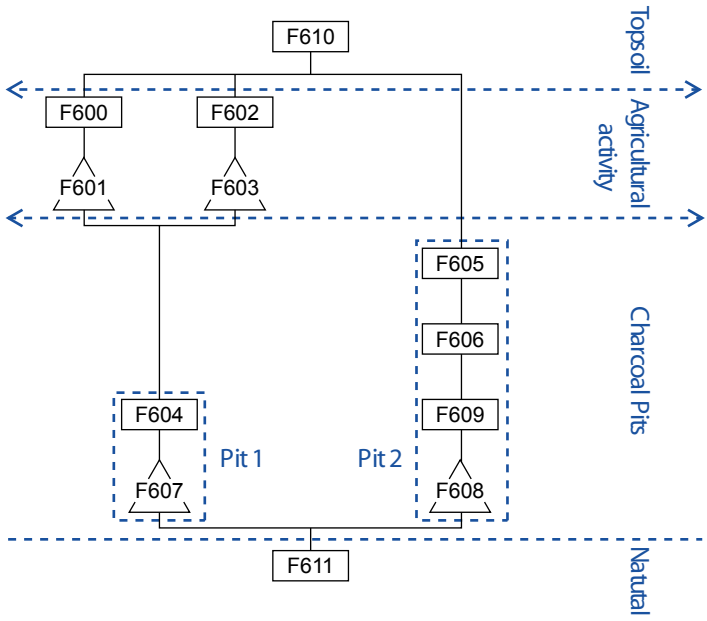

CRDS
Archaeological & Historical Consultants
Unit 4, Dundrum Business Park, Dublin 14.
Tel: +353 1 2968190-3 Fax: +353 1 2968195
email: info@crds.ie

Figure No: 10 Client: NRA
Title: See below Drawn By: C. McD
Job No: 579 Date: 25/02/05

Figure 10: Stonehousefarm 3 Site Matrix

The University of Waikato

Radiocarbon Dating Laboratory

Private Bag 3105
Hamilton,
New Zealand.
Fax +64 7 838 4192
Ph +64 7 838 4278
email c14@waikato.ac.nz
Head: Dr Alan Hogg

Report on Radiocarbon Age Determination for Wk- 17959

Submitter	MM Murray
Submitter's Code	A001/012.F606.601.1
Site & Location	Stonehouse farm 3, Co. Westmeath, Ireland
Sample Material	Charcoal
Physical Pretreatment	Possible contaminants were removed. Washed in ultrasonic bath.
Chemical Pretreatment	Sample washed in hot 10% HCl, rinsed and treated with hot 1% NaOH. The NaOH insoluble fraction was treated with hot 10% HCl, filtered, rinsed and dried.

$d^{14}C$	-110.6 ± 3.6	‰
$\delta^{13}C$	-25.2 ± 0.2	‰
$D^{14}C$	-110.3 ± 3.6	‰
% Modern	89.0 ± 0.4	%
Result	**939 ± 33 BP**	

Comments

AGHogg
15/2/06

- Result is *Conventional Age or % Modern* as per Stuiver and Polach, 1977, Radiocarbon 19, 355-363. This is based on the Libby half-life of 5568 yr with correction for isotopic fractionation applied. This age is normally quoted in publications and must include the appropriate error term and Wk number.
- Quoted errors are 1 standard deviation due to counting statistics multiplied by an experimentally determined Laboratory Error Multiplier of 1 .
- The isotopic fractionation, $\delta^{13}C$, is expressed as ‰ wrt PDB.
- Results are reported as *% Modern* when the conventional age is younger than 200 yr BP.

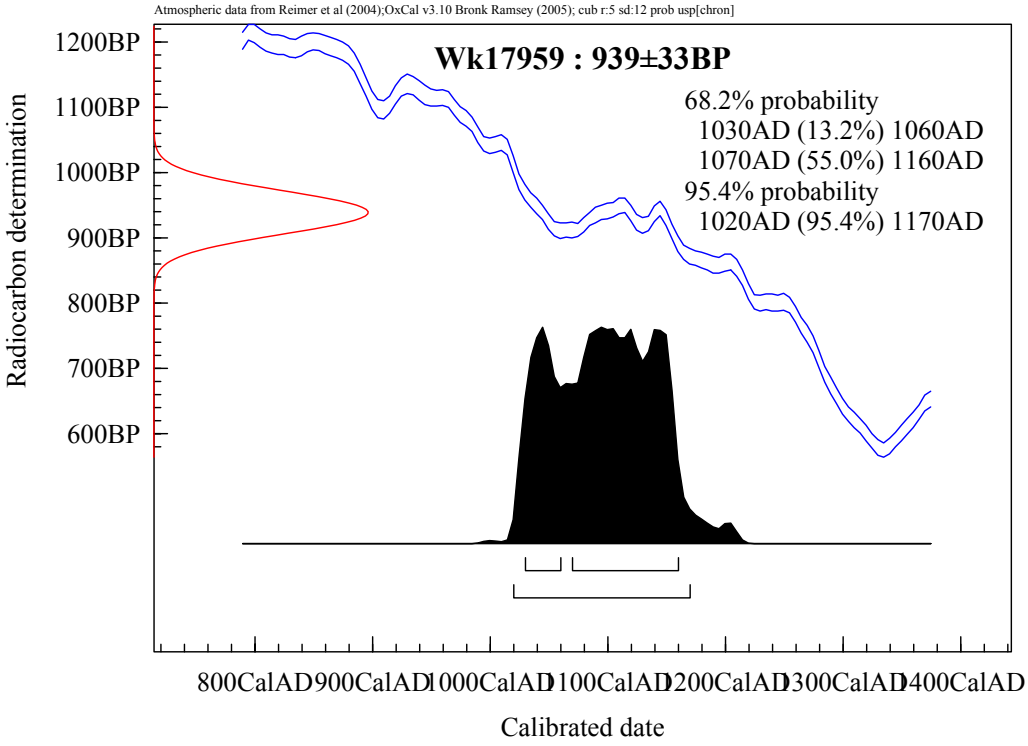
Atmospheric data from Reimer et al (2004);OxCal v3.10 Bronk Ramsey (2005); cub r:5 sd:12 prob usp[chron]
Wk17959 : 939±33BP
68.2% probability
1030AD (13.2%) 1060AD
1070AD (55.0%) 1160AD
95.4% probability
1020AD (95.4%) 1170AD
Radiocarbon determination
1200BP
1100BP
1000BP
900BP
800BP
700BP
600BP
800CalAD
900CalAD
1000CalAD
1100CalAD
1200CalAD
1300CalAD
1400CalAD
Calibrated date